Polo Estate 1998 ➤

Running gear self-diagnosis for ABS

Edition 01.2000

Protected by copyright. Copying for private or commercial purposes, in part or in whole, is not permitted unless authorised by Volkswagen AG. Volkswagen AG does not guarantee or accept any liability with respect to the correctness of information in this document. Copyright by Volkswagen AG.

satelettronica

Service

List of Workshop Manual Repair GroupsList of Workshop Manual Repair GroupsList of Workshop Manual Repair Groups

Polo Estate 1998 ➤

Running gear self-diagnosis for ABS

Repair Group

01 - Self-diagnosis, Electrical check

satelettronica

Protected by copyright. Copying for private or commercial purposes, in part or in whole, is not permitted unless authorised by Volkswagen AG. Volkswagen AG does not guarantee or accept any liability with respect to the correctness of information in this document. Copyright by Volkswagen AG.

Technical information should always be available to the foremen and mechanics, because their careful and constant adherence to the instructions is essential to ensure vehicle road-worthiness and safety. In addition, the normal basic safety precautions for working on motor vehicles must, as a matter of course, be observed.

All rights reserved.
No reproduction without prior agreement from publisher.

Copyright © 2011 Volkswagen AG, Wolfsburg 00056405820

Contents

01 - Self-diagnosis, Electrical check . . . 1

1 Self-diagnosis function ITT Mark 20 GI and ITT Mark 20 IE . . . 1
1.1 Self-diagnosis function ITT Mark 20 GI and ITT Mark 20 IE . . . 1
1.2 Function . . . 1
1.3 Distinguishing features of ABS ITT Mark 20 GI / ITT Mark 20IE and ABS/EDL ITT Mark 20 GI / ITT Mark 20 IE . . . 2
1.4 Technical data of self-diagnosis . . . 3
1.5 Safety precautions and fundamental points regarding fault finding . . . 3
1.6 Fault finding with fault reader V.A.G 1551 on ABS and ABS/EDL, ITT Mark 20 GI and ITT Mark 20 IE (flow chart) . . . 4

2 Electrical/electronic components and fitting locations >09.99 . . . 6
2.1 Electrical/electronic components and fitting locations >09.99 . . . 6

3 Faults displayed by warning lamps K47 and K7 > 09.99 . . . 12
3.1 Faults displayed by warning lamps K47 and K7 > 09.99 . . . 12

4 Performing self diagnosis > 09.99 . . . 13
4.1 Performing self diagnosis > 09.99 . . . 13
4.2 Test prerequisites for self-diagnosis . . . 13
4.3 Safety precautions . . . 13
4.4 Connecting Vehicle Diagnosis, Testing and Information System VAS 5051 and selecting ABS control unit . . . 13
4.5 Connecting fault reader V.A.G 1551 and selecting functions . . . 14
4.6 List of selectable functions . . . 17
4.7 Interrogating fault memory . . . 17
4.8 Automatic test sequence . . . 18
4.9 Fault table . . . 19
4.10 Erasing fault memory, ending output . . . 24
4.11 Coding control unit . . . 25
4.12 Read measured value block . . . 26
4.13 Final control diagnosis . . . 29
4.14 Initiating basic setting . . . 36

5 Electrical check of ABS, ABS/EDL ITT Mark 20 GI and ITT Mark 20 IE . . . 41
5.1 Electrical check of ABS, ABS/EDL ITT Mark 20 GI and ITT Mark 20 IE . . . 41
5.2 Test prerequisites . . . 42
5.3 Multi-pin connector with contact assignment - ABS, ABS/EDL ITT Mark 20 GI (to 07.97) . . . 43
5.4 Test table - ABS, ABS/EDL ITT Mark 20 GI (to 07.97) . . . 44
5.5 Multi-pin connector with contact assignment - ABS, ABS/EDL ITT Mark 20 IE (from 08.97) . . . 49
5.6 Test table - ABS, ABS/EDL ITT Mark 20 IE (from 08.97) . . . 50
5.7 Adjusting brake light switch . . . 55

6 Mark 30 IE self-diagnosis function . . . 56
6.1 Mark 30 IE self-diagnosis function . . . 56
6.2 Function . . . 56
6.3 ABS Mark 30 IE allocation . . . 56
6.4 Technical data of self-diagnosis . . . 57
6.5 Safety precautions and fundamental points regarding fault finding . . . 57
6.6 Fault finding with fault reader V.A.G 1551 or with tester VAS 5051 on ABS Mark 30 IE (flow chart) . . . 58

7 Electrical/electronic components and fitting locations, Caddy 10.99 > . . . 60
7.1 Electrical/electronic components and fitting locations, Caddy 10.99 > . . . 60
7.2 Electrical/electronic components and fitting locations, Polo Classic, Polo Estate 10.99 > . . . 65

8 Faults displayed by warning lamps K47 and K118, 10.99 > . . . 70
8.1 Faults displayed by warning lamps K47 and K118, 10.99 > . . . 70

9 Performing self diagnosis 10.99 > . . . 71

satelettronica

9.1 Performing self diagnosis 10.99 > 71
9.2 Test prerequisites for self-diagnosis 71
9.3 Safety precautions 71
9.4 Connecting Vehicle Diagnosis, Testing and Information System VAS 5051 and selecting engine electronics control unit 72
9.5 Connecting fault reader V.A.G 1551 and selecting function 73
9.6 List of selectable functions 75
9.7 Interrogating fault memory 75
9.8 Fault table 76
9.9 Erasing fault memory, ending output 82
9.10 Coding control unit 83
9.11 Read measured value block 84
9.12 Final control diagnosis 88
9.13 Initiating basic setting 88

10 Electrical check of ABS Mark 30 IE 89
10.1 Electrical check of ABS Mark 30 IE 89
10.2 Test prerequisites 90
10.3 Multi-pin connector with contact assignment 91
10.4 Test table 93
10.5 Adjusting brake light switch 100

11 Definitions 101
11.1 Definitions 101

Protected by copyright. Copying for private or commercial purposes, in part or in whole, is not permitted unless authorised by Volkswagen AG. Volkswagen AG does not guarantee or accept any liability with respect to the correctness of information in this document. Copyright by Volkswagen AG.

satelettronica

01 - Self-diagnosis, Electrical check

1 - Self-diagnosis function ITT Mark 20 GI and ITT Mark 20 IE

1.1 - Self-diagnosis function ITT Mark 20 GI and ITT Mark 20 IE

1.2 - Function

The ABS designation has been changed:

Previously: Teves 20 GI

New: ITT Mark 20 GI

The work sequence and function has not changed because of the new designation. Both ABS systems are identical.

From 08.97 (model year 98) the following ABS system was introduced.

ITT MARK 20 IE

This ABS system is nearly identical with the ITT Mark 20 GI. The difference is the control unit software.

The term self diagnosis relates to the electrical/electronic part of the ABS or ABS/EDL; in other words only faults via the electrical connection to the control unit are recognised (e.g. valve open circuit).

The 25 pin ABS control unit (J104) forms with the hydraulic unit a compact unit. The unit is located on the left in the engine compartment. The control unit is equipped with a fault memory. The diagnostic connections are located behind driver's stowage box.

The control unit recognises faults and malfunctions during vehicle operation and stores them in a permanent memory, the contents of which remain despite the lack of battery voltage.

Sporadic (isolated) faults will also be recognised and stored. But if these faults do not occur again within the next 50 vehicle starts and driving off sequences then with the exception of "control unit defective", the fault memory will be erased (forget fault counter).

After switching on the ignition and/or starting the engine the ABS warning lamp (K47) and the red twin circuit brake system/handbrake warning lamp (K7) lights up for approx. 2 seconds.

During this period a test sequence (self-check) is run in the control unit for the following functions:

- The voltage supply is checked, at least 10.0 Volt
- The control unit including the valve windings are checked
- A speed sensor (electrical) check is carried out; fully completed at 20 km/h (approx. 13 mph)
- Control unit coding checked

Fault reader V.A.G 1551

The self-diagnosis must be initiated at the commencement of fault finding. Electrical faults which influence the braking characteristics will be stored.

They can be interrogated with the fault reader V.A.G 1551, Vehicles system tester V.A.G 1552 or Vehicle Diagnosis, Testing and Information System VAS 5051.

satelettronica

Protected by copyright. Copying for private or commercial purposes, in part or in whole, is not permitted unless authorised by Volkswagen AG. Volkswagen AG does not guarantee or accept any liability with respect to the correctness of information in this document. Copyright by Volkswagen AG.

The fault information displayed is used in conjunction with a fault table which has information on the possible fault causes for pin-pointed repair measures.

1.3 - Distinguishing features of ABS ITT Mark 20 GI / ITT Mark 20IE and ABS/EDL ITT Mark 20 GI / ITT Mark 20 IE

Left-hand drive

The brake servo boost is produced by vacuum pressure.

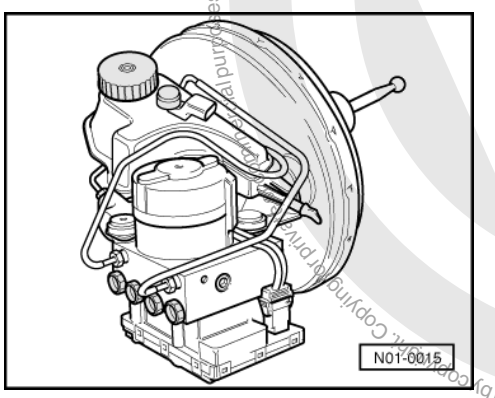

-> Distinguishing features:

- Brake servo 9"
- Control unit, 25-pin (bolted to hydraulic unit)

Right-hand drive

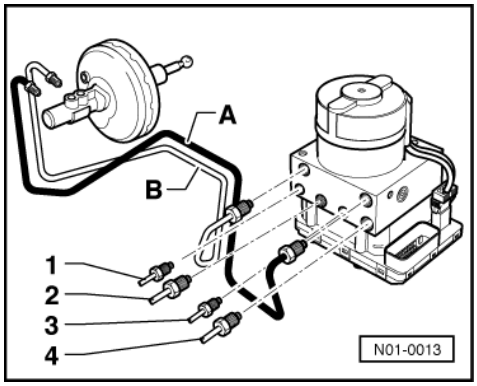

The brake servo boost is produced by vacuum pressure.

-> Distinguishing features:

- Brake servo 8"
- Control unit, 25-pin (bolted to hydraulic unit)

A - Brake pipe between master cylinder/secondary piston circuit and hydraulic unit
B - Brake pipe between master cylinder/primary piston circuit and hydraulic unit
1 - Hydraulic unit to front right brake caliper
2 - Hydraulic unit to rear left brake caliper
3 - Hydraulic unit to rear right brake caliper

satelettronica

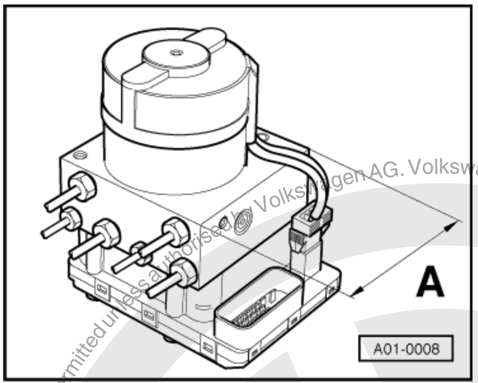

4 - Hydraulic unit to front left brake caliper

-> Distinguishing features of ABS and ABS/EDL - ITT Mark 20 GI and ITT Mark 20 IE hydraulic unit / left and right-hand drive

- Dimension -A- 100 mm vehicles with ABS
- Dimension -A- 130 mm vehicles with ABS/EDL

1.4 - Technical data of self-diagnosis

Control unit (J104)

During the interrogation of the fault memory the control unit identification will be displayed on V.A.G 1551, e.g.

ABS system ITT Mark 20 GI	
3A0 907 379	ABS
3A0 907 379 A	ABS/EDL
ABS system ITT Mark 20 IE	
1J0 907 379 D	ABS
1J0 907 379 G	ABS
1J0 907 379 E	ABS/EDL
1J0 907 379 H	ABS/EDL

Fault memory

Permanent memory (fault memory) contents remain even without a supply voltage.

Data output

Occurs in operating mode 1 (Rapid data transfer)

1.5 - Safety precautions and fundamental points regarding fault finding

- The ABS is a vehicle safety system; the appropriate knowledge is necessary to work on the system.
- In order to check complaints and to be able to carry out pin-pointed fault finding, the fault memory must be interrogated before commencing work on the ABS system.
- Only separate connectors when the ignition is switched off.
- Observe the appropriate instructions regarding the handling of brake fluid.

=> Brake system; Repair group 47; Bleeding brake system, vehicles with and without ABS Bleeding brake system, vehicles with and without ABS

Protected by copyright. Copying for private or commercial purposes, in part or in whole, is not permitted unless authorised by Volkswagen AG. Volkswagen AG does not guarantee or accept any liability with respect to the correctness of information in this document. Copyright by Volkswagen AG.
satelettronica

=> Special Information, Running gear No. 21

- ABS faults are indicated by the ABS warning lamp lighting up; certain faults will only recognised at speeds above 20 km/h (approx. 13 mph) (carry out road test).
- If the ABS (K47) and the twin circuit brake system/handbrake (K7) warning lamps do not light up, but the brake system is not functioning correctly then the fault must be sought in the conventional braking system.
- Information on eliminating current defects

=> Technical Service Handbook.

Necessary technical information

Current flow diagrams, Electrical fault finding and Fitting locations binder
Workshop Manual Caddy 1996 ▸, Polo Classic 1996 ▸, Polo Estate 1998 ▸ Brake systems
Workshop Manual Caddy 1996 ▸, Polo Classic 1996 ▸, Polo Estate 1998 ▸ Running gear, axles, steering
Technical service handbook
Self study programme ABS Teves 20 GI (No.: 171)

1.6 - Fault finding with fault reader V.A.G 1551 on ABS and ABS/EDL, ITT Mark 20 GI and ITT Mark 20 IE (flow chart)

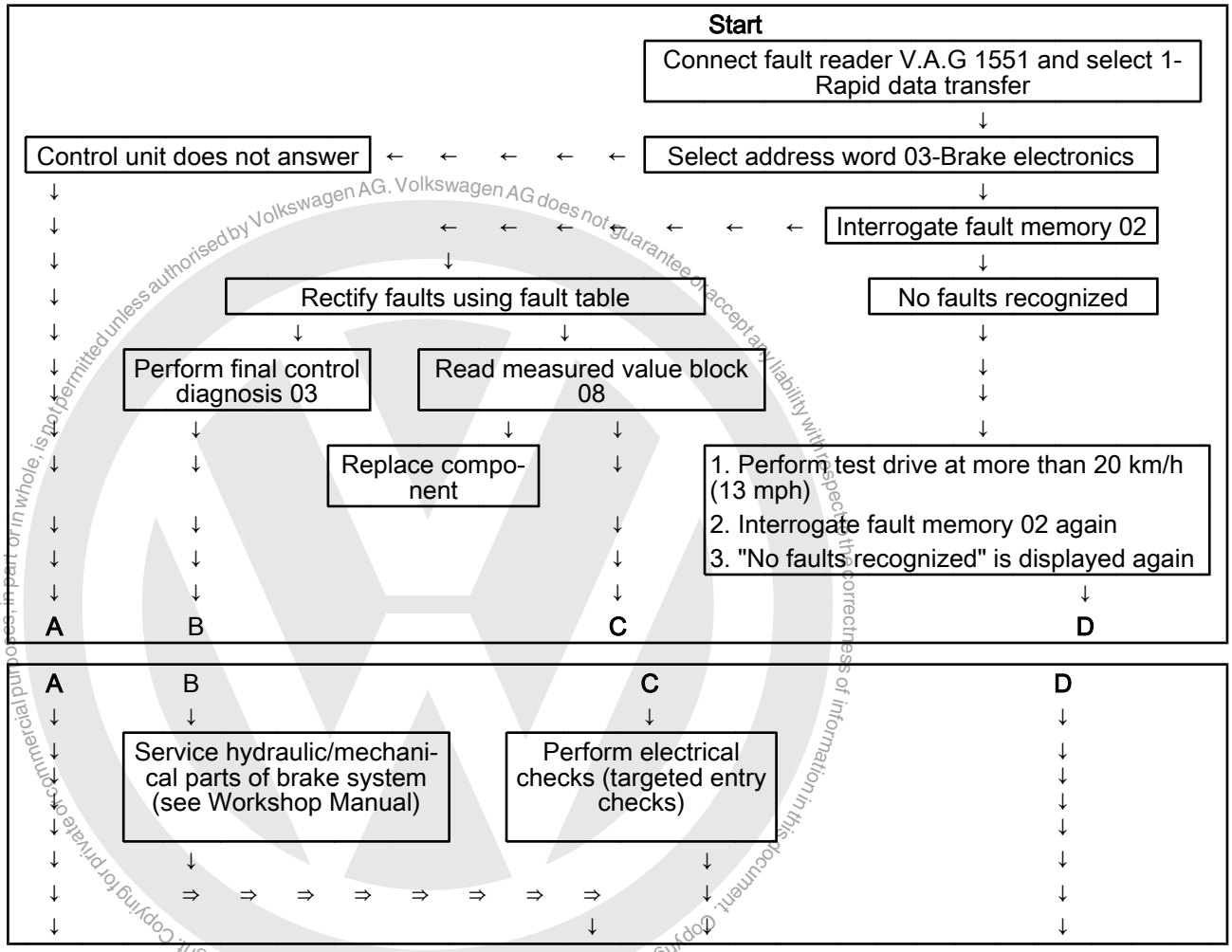

Protected by copyright. Copying for private or commercial purposes, in part or in whole, is not permitted unless authorised by Volkswagen AG. Volkswagen AG does not guarantee or accept any liability with respect to the correctness of information in this document. Copyright by Volkswagen AG.

satelettronica

A	B	C	D
- 25-pin connector not connected - Perform test steps 1, 2 and 3 of electrical tests	↓	↓	1. Perform all test steps of electrical 2. tests Service hydraulic/mechanical parts of brake system (see Workshop Manual)

↓

Further repairs:

- Connect fault reader V.A.G 1551 and interrogate fault memory again.
- Perform test drive at more than 20 km/h (13 mph) and perform a ABS regulation.
- Interrogate fault memory again after test drive. If "No fault recognized" appears on display of fault reader V.A.G 1551 after rectifying faults and performing test drive the self-diagnosis is completed.

↓

End

Protected by copyright. Copyright by Volkswagen AG. Volkswagen AG does not guarantee or accept any liability with respect to the correctness of information in this document. Copying for private or commercial purposes, in part or in whole, is not permitted unless authorised by Volkswagen AG.

satelettronica

2 - Electrical/electronic components and fitting locations >09.99

2.1 - Electrical/electronic components and fitting locations >09.99

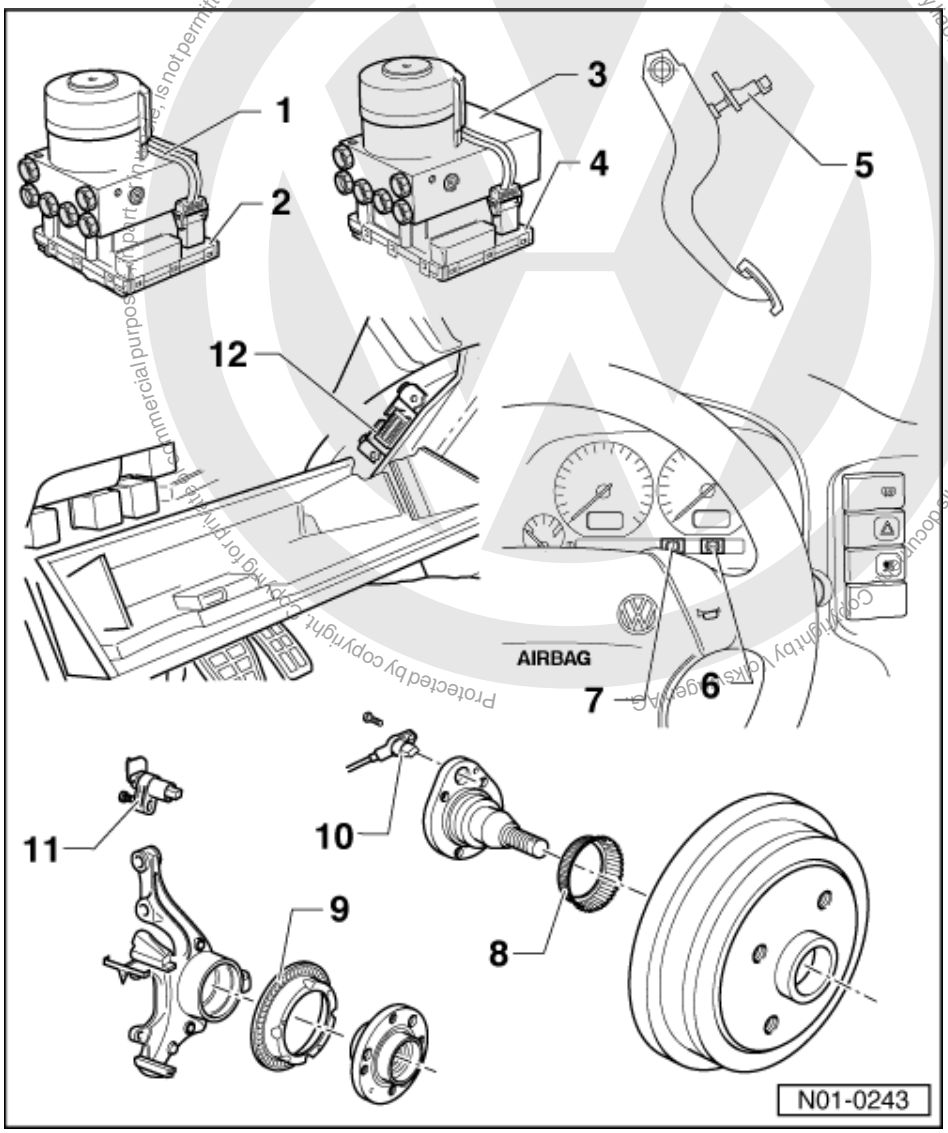

1 ABS hydraulic unit (N55)

The hydraulic unit consists of the components:

- Hydraulic pump (V64)
- Valve block (contains the in/outlet valves).
- The hydraulic pump (V64) and valve block must not be separated from one another

=> Brake systems; Repair group 45; Hydraulic unit, brake servo/brake master cylinder - Assembly overview; Removing and installing control unit and hydraulic unit Hydraulic unit, brake servo/brake master cylinder - Assembly overview Removing and installing control unit and hydraulic unit

- When changing the hydraulic unit always seal the old part with the plugs from the repair set Part No. 1H0 698 311 A

satelettronica

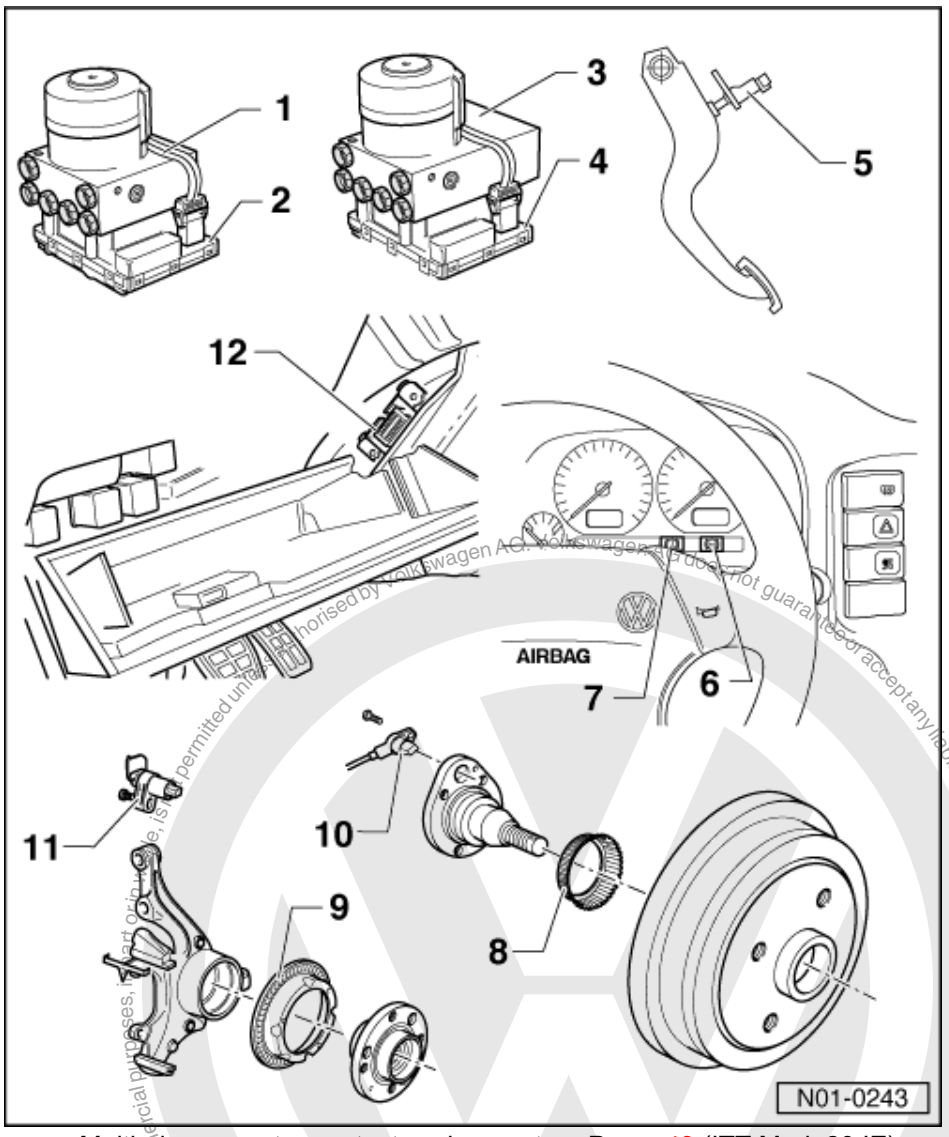

- Multi-pin connector contact assignment => Page 49 (ITT Mark 20 IE)

2 ABS control unit (J104)

- Checked by self-diagnosis
- Located on the hydraulic unit on left of engine compartment.
- Checking the multi-pin connector to control unit
  =>Page 41
- Do not disconnect connector before successfully completing interrogation of fault memory. First switch ignition off then separate connector.

Protected by copyright. Copying for private or commercial purposes, in part or in whole, is not permitted unless authorised by Volkswagen AG. Volkswagen AG does not guarantee or accept any liability with respect to the correctness of information in this document. Copyright by Volkswagen AG.
satelettronica

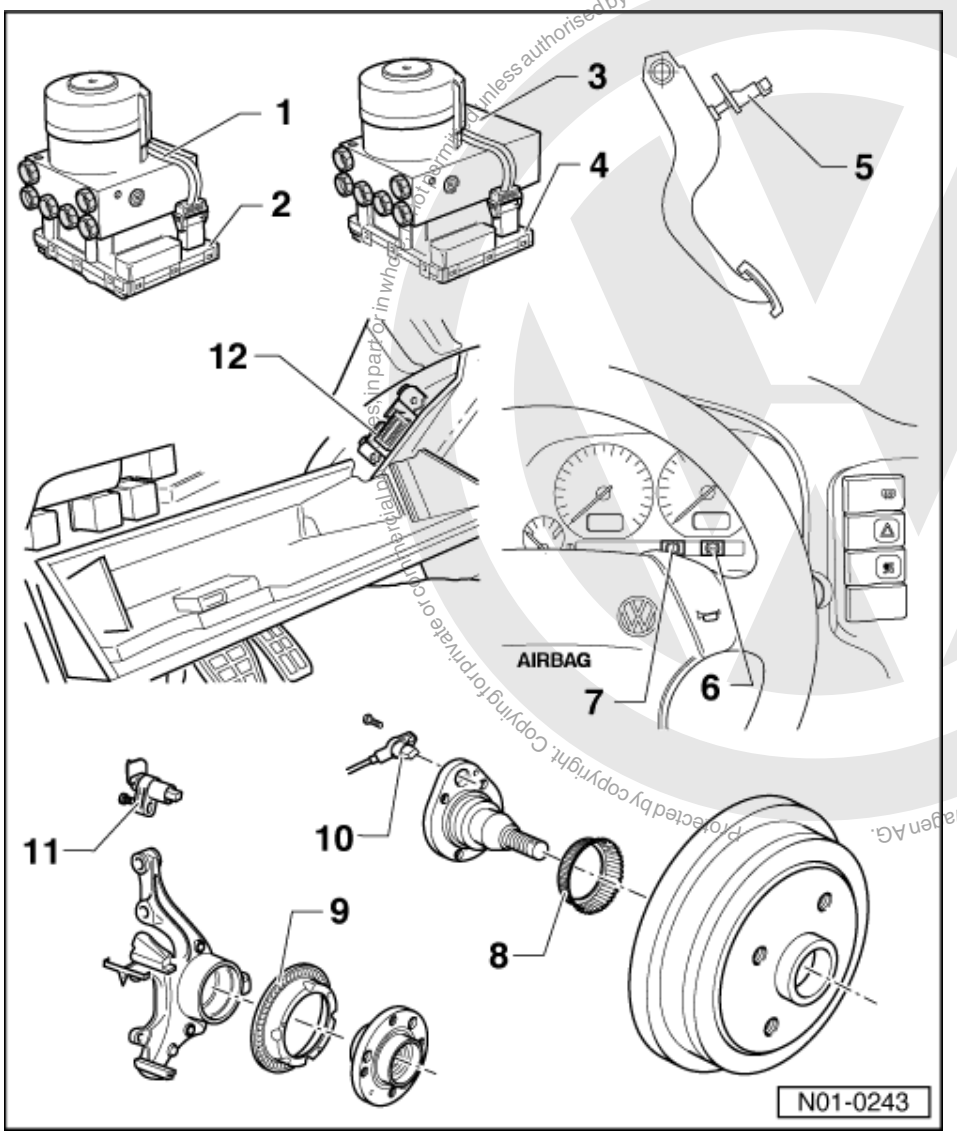

3 ABS/EDL hydraulic unit (N55)

The hydraulic unit consists of the components:

- Hydraulic pump (V64)
- Valve block (contains the in/outlet valves).
- The hydraulic pump (V64) and valve block must not be separated from one another

=> Brake systems; Repair group 45; Hydraulic unit, brake servo/brake master cylinder - Assembly overview; Removing and installing control unit and hydraulic unit Hydraulic unit, brake servo/brake master cylinder - Assembly overview Removing and installing control unit and hydraulic unit

- When changing the hydraulic unit, always seal the old part with the plugs from the repair set Part No. 1H0 698 311 A
- Multi-pin connector contact assignment => Page 49 (ITT Mark 20 IE)

satelettronica

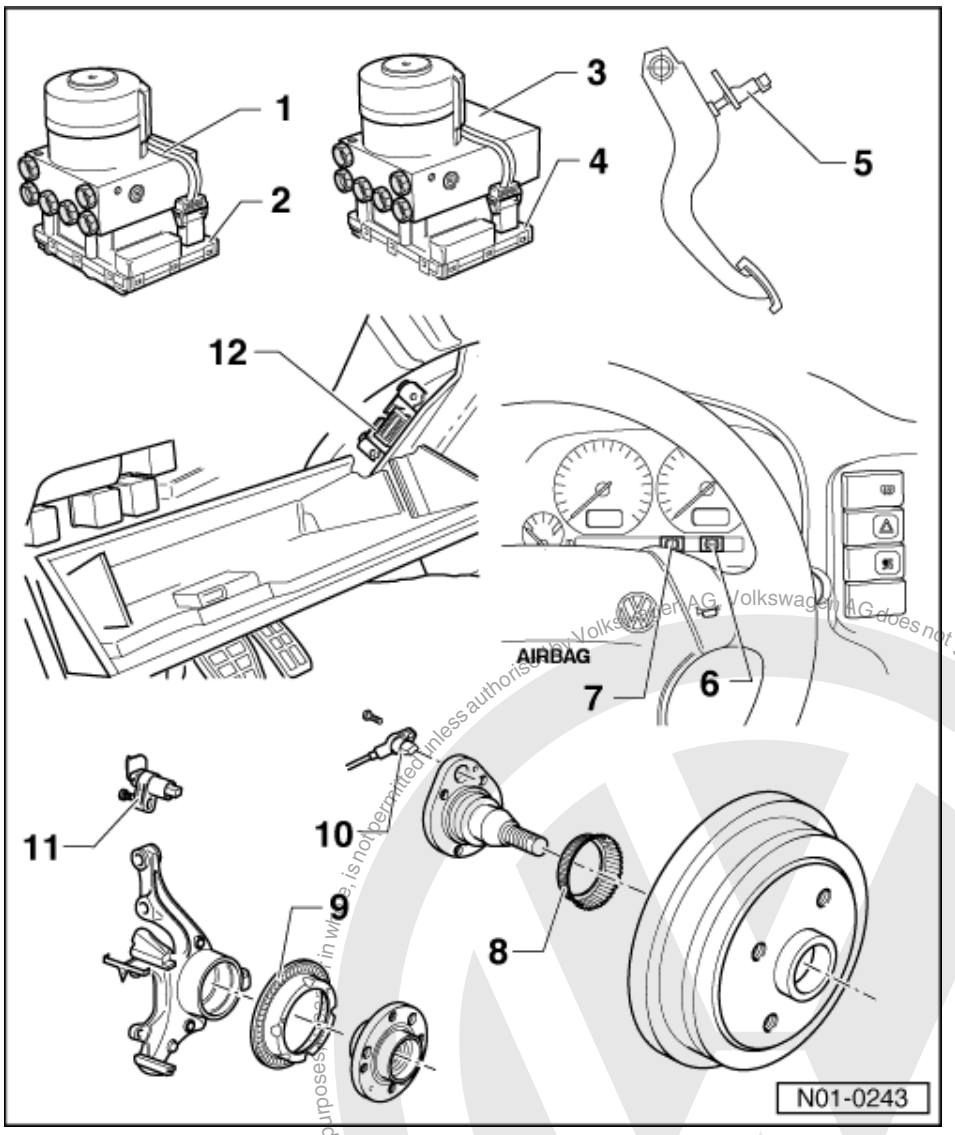

4 ABS/EDL control unit (J104)

- Checked by self-diagnosis
- Located on the hydraulic unit on left of engine compartment.
- Multi-pin connector contact assignment => Page 49 (ITT Mark 20 IE)
- Do not disconnect connector before successfully completing interrogation of fault memory. First switch ignition off then separate connector.

5 Brake light switch (F)

- The brake light switch is open in the rest position;
- Adjusting => Page 55
- Can be checked via read measured value block => Page 26

Protected by copyright. Copyright by Volkswagen AG.
Volkswagen AG does not guarantee or accept any liability with respect to the correctness of information in this document.
satelettronica

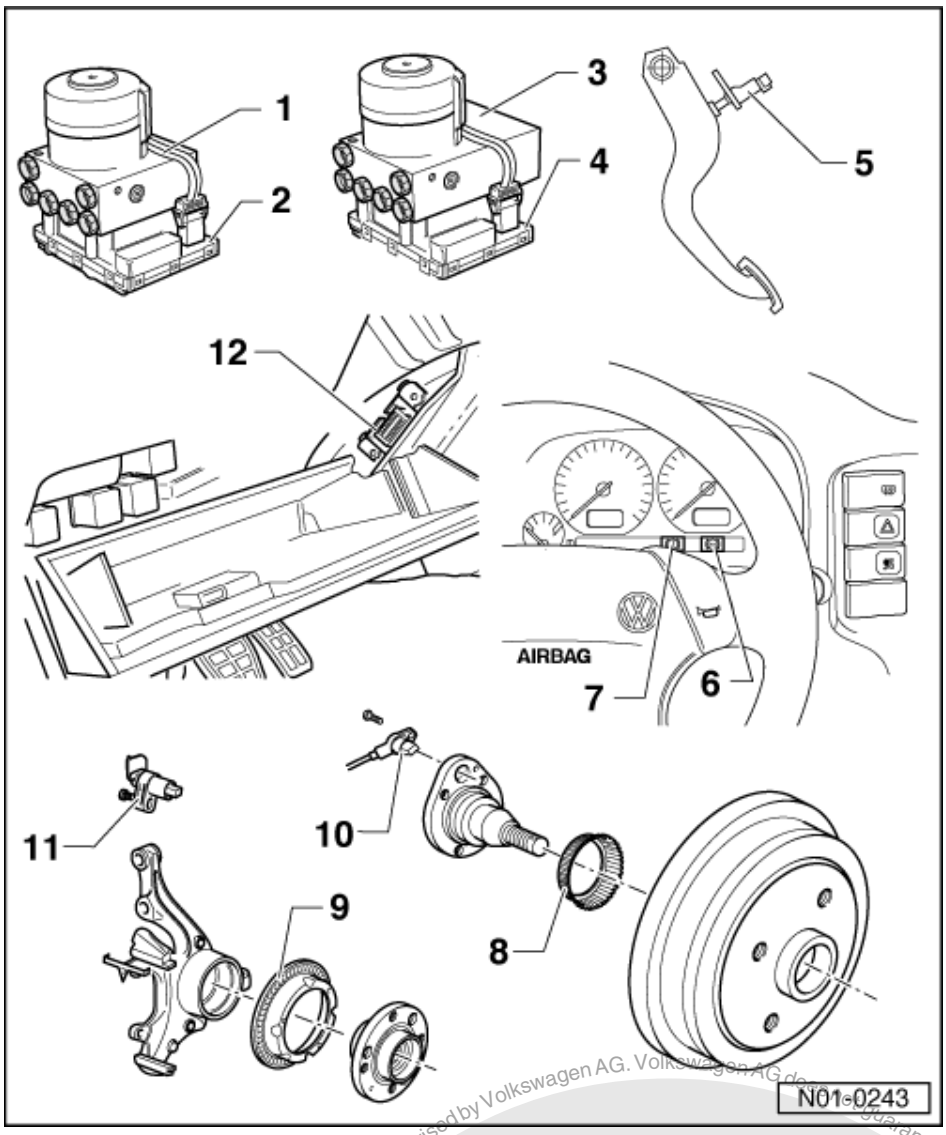

6 ABS warning lamp (K47)

Locations:

- Location: in dash panel insert
  Function: =>Page 12

7 Twin circuit brake system/handbrake warning lamp (K7)

- Location: In the dash panel insert
  Function: =>Page 12

8 Impulse wheel for rear right and left speed sensors

- Removing and installing

=> Brake systems; Repair group 45; Removing and installing parts of the ABS system on front and rear axle Removing and installing parts of the ABS system on front and rear axle

9 Impulse wheel for front right and left speed sensors

- Removing and installing

=> Running gear, Axles, Steering; Repair group 40; Servicing front suspension Servicing front suspension

Protected by copyright. Copying for private or commercial purposes, in part or in whole, is not permitted unless authorised by Volkswagen AG. Volkswagen AG does not guarantee or accept any liability with respect to the correctness of information in this document. Copyright by Volkswagen AG.

satelettronica

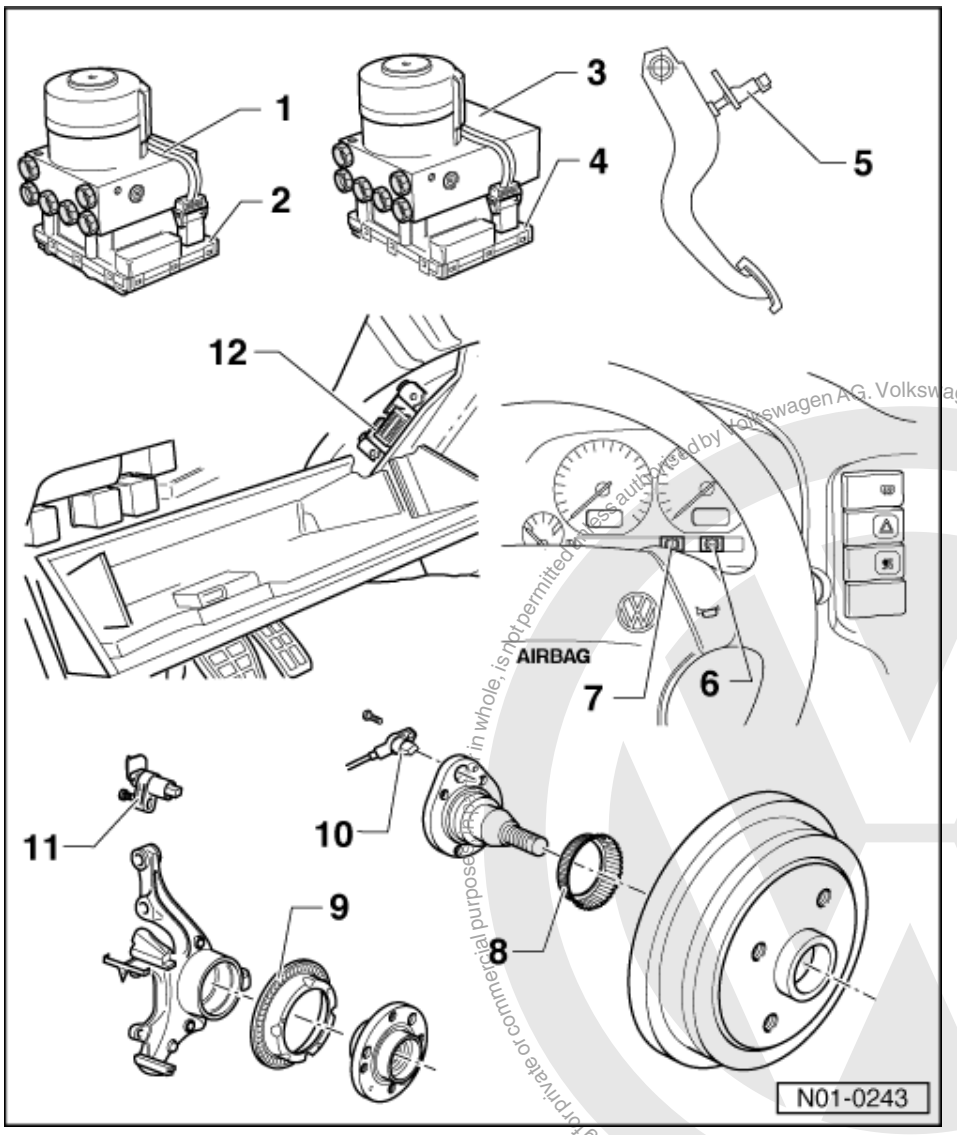

10 Rear right/left speed sensor (G44/G46)

- Installation instructions => Item 11

11 Front right/left speed sensor (G45/G47)

- Checked by self-diagnosis
- Before inserting the sensor clean the inner surface of the sensor mounting and coat with lubricating paste G 000 650
- When connecting the speed sensor wire ensure it is not twisted in the wheel housing
- Securing bolt tightening torque
  - 10 Nm

12 Diagnostic connections

- Location: Behind driver's side stowage compartment

Copyright by Volkswagen AG. Volkswagen AG does not guarantee or accept any liability with respect to the correctness of information in this document. Copyright by Volkswagen AG. Protected by copyright. Copying for private or commercial purposes, in whole, is not permitted unless authorised by Volkswagen AG.
satelettronica

3 - Faults displayed by warning lamps K47 and K7 > 09.99

3.1 - Faults displayed by warning lamps K47 and K7 > 09.99

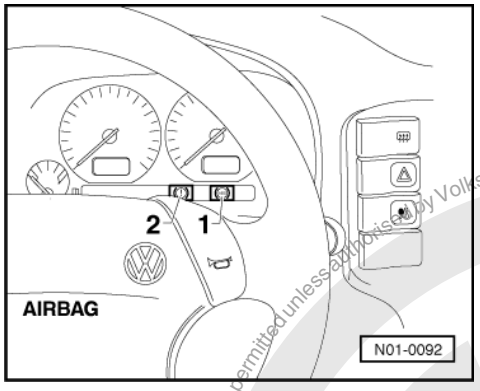

Warning lamp K47

- If the ABS warning lamp (K47) -1- does not go out after switching on ignition and completion of test sequence then the fault may be:

  -a- Voltage supply is below 10 Volt
  -b- There is a fault in the ABS
  With an ABS fault -b- the anti-lock brake system remains switched off, but the conventional brake system remains fully functional.
  -c- There has been a sensor fault after last starting the vehicle (sporadic).
  In the case of sensor fault -c- the ABS warning lamp will extinguish automatically after restarting the engine and 20 km/h (approx. 13 mph) is exceeded.
  -d- Open circuit between dash panel insert pin 14 and control unit pin16.
  -e- Dash panel insert is defective.

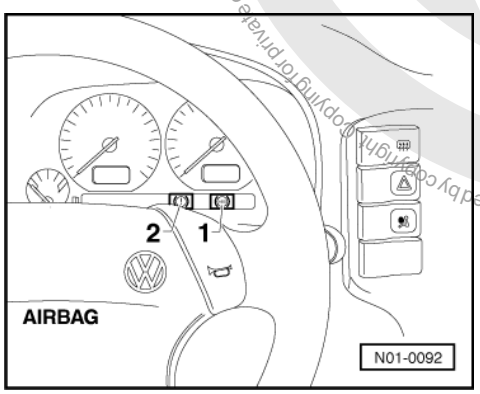

Warning lamps K47 and K7

- If the ABS warning lamp (K47) -1- goes out but the twin circuit brake system/handbrake warning lamp (K7) -2- remains on then the fault may be:

  -a- The handbrake is pulled on
  -b- The brake fluid level is too low
  -c- There is a fault in the activation of the twin circuit brake system/handbrake warning lamp (K7) => Current flow diagram.

=> Current flow diagrams, Electrical fault finding and Fitting locations binder

- If the ABS warning lamp (K47) -1- and the twin circuit brake system/handbrake warning lamp (K7) -2- both come on, the ABS system is defective and the electronic brake distribution is not functioning.

Protected by copyright. Copyright by Volkswagen AG. Copying for private or commercial purposes, in part or in whole, is not permitted unless authorised by Volkswagen AG. Volkswagen AG does not guarantee or accept any liability with respect to the correctness of information in this document.
satelettronica

Warning!
After the ABS (K47) and the brake system (K7) warning lamps light up, it is possible that the rear wheels lock-up earlier when braking.

Vehicles with ABS/EDL

Complaint: "Vehicle has no EDL function"

For this complaint a possible fault cause may be the brake light switch is incorrectly adjusted =>Adjusting brake light switch, Page 55 .

A further possible fault cause may be the brake light switch is not functioning =>Read measured value block, Page 26 , display group number 3.

4 - Performing self diagnosis > 09.99

4.1 - Performing self diagnosis > 09.99

4.2 - Test prerequisites for self-diagnosis

- The tyres fitted to all wheels must be of the same (approved) size; tyres inflated to prescribed pressure.
- Mechanical/hydraulic parts of the brake system including brake light switch and brake lights OK.
- Hydraulic pipes and connections not leaking (visual check of hydraulic unit, brake calipers, wheel cylinders, tandem master brake cylinder).
- Wheel bearings and wheel bearing play OK.
- Control unit -J104- is correctly bolted to hydraulic unit -N55.
- Connector on control unit -J104- correctly plugged-in (retainer is engaged).
- Check contacts of ABS components for damage and correct seating.
- All fuses according to current flow diagram OK (remove fuse from fuse holder to check).
- Supply voltage OK (at least 10.0 V).

4.3 - Safety precautions

Note!
- rYou must always secure testing and measuring equipment on the rear seat.
- rWhen vehicle is being driven, only a passenger can operate this equipment.

4.4 - Connecting Vehicle Diagnosis, Testing and Information System VAS 5051 and selecting ABS control unit

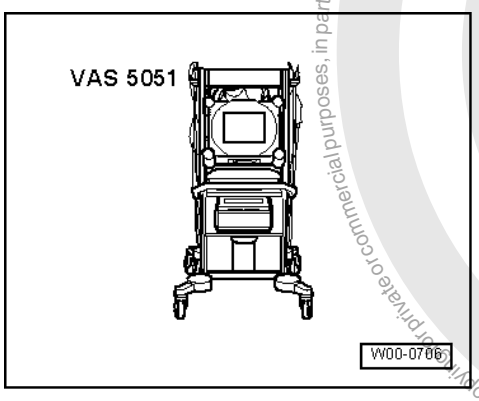

satelettronica
Protected by copyright. Copyright by Volkswagen AG. Copyright by Volkswagen AG. Volkswagen AG does not guarantee or accept any liability with respect to the correctness of information in this document. Copying for private or commercial purposes, in part or in whole, is not permitted unless authorised by Volkswagen AG.

All functions which could previously be performed with V.A.G 1551 can also be performed with the new tester VAS 5051 in the operating mode "vehicle self-diagnosis":

=> Operating instructions for Vehicle Diagnosis, Testing and Information System VAS 5051.

Special tools, workshop equipment, testers, measuring instruments and auxiliary items required

- VAS 5051 Vehicle Diagnosis, Testing and Information System

- The ABS function is switched off in the control unit during the self diagnosis.
- The fault memory can be erased after successful interrogation and repair.

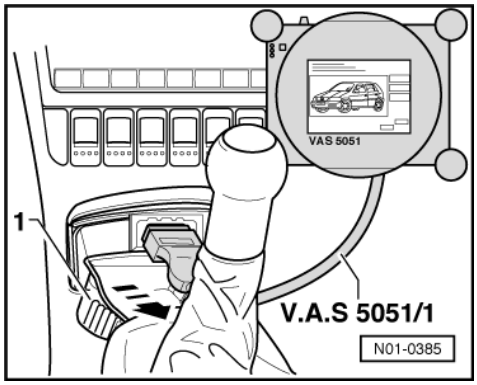

- Open driver's side stowage compartment.
- With ignition switched off, connect tester VAS 5051 to diagnosis connection using diagnosis cable VAS 5051/1 or VAS 5051/3.

- In the functions 04 - Basic setting/08 - Read data block, the display zones will be listed from top to bottom.
- If the display does not indicate as described in the work sequence:

=> Operating instructions for Vehicle Diagnosis, Testing and Information System VAS 5051.

4.5 - Connecting fault reader V.A.G 1551 and selecting functions

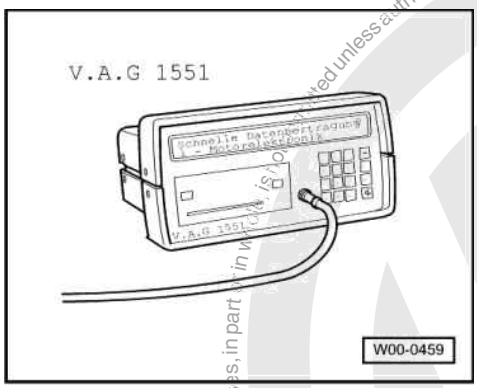

All functions which could previously be performed with V.A.G 1551 can also be performed with the new tester VAS 5051 in the operating mode "vehicle self-diagnosis":

Special tools and workshop equipment required

- V.A.G 1551 Fault reader or V.A.G 1552 vehicle system tester.

Protected by copyright. Copying for private or commercial purposes, in part or in whole, is not permitted unless authorised by Volkswagen AG. Volkswagen AG does not guarantee or accept any liability with respect to the correctness of information in this document. Copyright by Volkswagen AG.

satelettronica

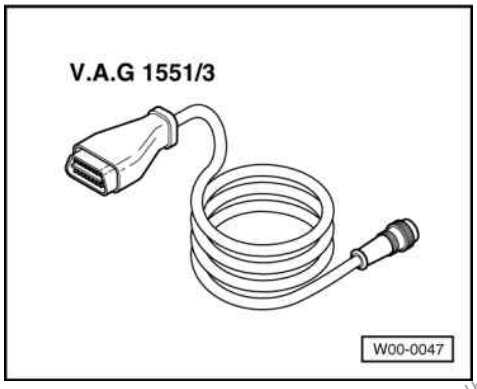

- V.A.G 1551/3 or 1551/3A Adapter cable

- The ABS function is switched off in the control unit during the self diagnosis.
- The fault memory can be erased after successful interrogation and repair.

- Open driver's side stowage compartment.

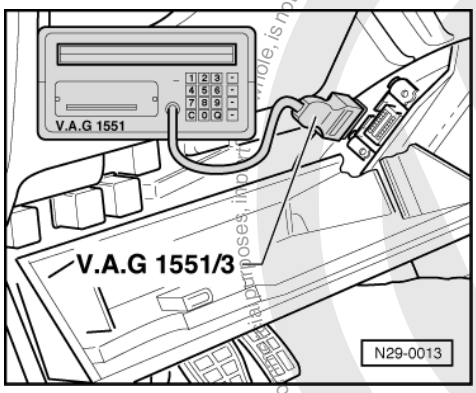

- -> With ignition switched off connect V.A.G 1551 with cable V.A.G 1551/3 to diagnostic sockets.

-> Indicated on display

```
V.A.G self diagnosis      HELP
1-Rapid data transfer 1)
2-Flash code output1)
```

1) Is displayed alternately

If the display remains blank, check self diagnosis connector, Electrical check, =>Page 41 , test steps 14 and 15

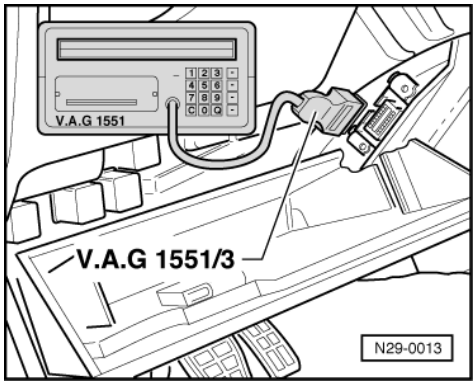

- Depending on the programme, additional operating information can be printed out by pressing the HELP key of V.A.G 1551.
- The ⇒key is used for moving forward within the programme

Protected by copyright. Copyright by Volkswagen AG.
Copyright by Volkswagen AG. Volkswagen AG does not guarantee or accept any liability with respect to the correctness of information in this document.
satelettronica

- The PRINT key is used for switching on the printer (warning lamp in key comes on).

- Switch on ignition.
- Switch on printer with the Print key (indicator lamp in key lights up).
- Press key -1- for "Rapid data transfer" operating mode.

-> Indicated on display

```
Rapid data transfer     HELP
Enter address word XX
```

- Press keys -0- and -3-;
  03 inputs the address word of the vehicle system to be tested "Brake electronics".

-> Indicated on display

```
Rapid data transfer     Q
03 - Brake electronics
```

- Confirm input with Q key.

-> Then the display will show:

```
1J0 907 379 G     ABS 20 IE CAN     0001
□
Coding 16416     WSC XXXXX
```

Displayed is:

- The control unit identification number.

e.g. (1J0 907 379 G)

Allocation of control unit

=> Parts list

- System designation (ABS 20 IE)
- Data BUS capable system (CAN)
- Hard and software level
- Current control unit coding (16416)
- Workshop code

=> Fault reader V.A.G 1551 operating instructions.

Coding control unit =>Page 25

If the control unit identification number does not appear => Summary of functions Page 17 .

- Press ⇒ key.

-> Indicated on display

```
Rapid data transfer     HELP
Select function XX
```

A list of the possible functions is printed out after pressing the HELP key:

After pressing the ⇒ key, the V.A.G 1551 programme returns to the start position.

-> Indicated on display; (Function selection, e.g. 02 - interrogate fault memory)

```
Rapid data transfer     HELP
Select function XX
```

- If the adjacent fault information appears in the display, the possible causes of the fault can be printed out by pressing the HELP key.

-> A possible fault cause are the fuses for in/outlet valves S123 and S124.

Protected by copyright. Copyright by Volkswagen AG. Copying for private or commercial purposes, in part or in whole, is not permitted unless authorised by Volkswagen AG. Volkswagen AG does not guarantee or accept any liability with respect to the correctness of information in this document.
satelettronica

```
Rapid data transfer      HELP
Control unit does not answer!
```

-> Check ignition is switched on.

```
Rapid data transfer      HELP
K wire does not switch to positive!
```

-> Control unit identification influenced during interrogation (possibly influenced from external sources?)

```
Rapid data transfer
No signal from control unit!
```

- Check diagnostic wires and also voltage supply and earth connection for ABS (J104), Electrical check, =>Page 41 .
- After rectifying the possible causes of the fault, again enter the address word 03 for "Brake electronics" and confirm with Q key.

-> Indicated on display after entering the address word 03

```
Rapid data transfer
Tester sends address word 03
```

-> Then the display will show:

```
1J0 907 379 G      ABS 20 IE CAN      0001
□
Coding 16416      WSC XXXXX
```

- Press ⇒ key.

-> Indicated on display

```
Rapid data transfer      HELP
Select function XX
```

4.6 - List of selectable functions

	Page
00 - Automatic test sequence	18
01 - Interrogate control unit version =>Connecting tester VAS 5051 and selecting ABS control unit	13
01 - Interrogate control unit version =>Connecting fault reader V.A.G 1551 and selecting functions	14
02 - Interrogate fault memory	17
03 - Final control diagnosis	29
04 - Initiate basic setting1)	36
05 - Erase fault memory	24
06 - End output	24
07 - Code control unit	25
08 - Read measured value block	26

1) The basic setting is only necessary if at least one chamber of the brake fluid reservoir has completely run dry.

4.7 - Interrogating fault memory

-> Indicated on display; (Function selection)

Protected by copyright. Copying for private or commercial purposes, in part or in whole, is not permitted unless authorised by Volkswagen AG. Volkswagen AG does not guarantee or accept any liability with respect to the correctness of information in this document. Copyright by Volkswagen AG.
satelettronica

```
Rapid data transfer                HELP
Select function XX
```

- Press keys -0- and -2-; 02 enters the "Interrogate fault memory" function.

-> Indicated on display

```
Rapid data transfer            Q
02 - Interrogate fault memory
```

- Confirm entry with Q key.

-> The number of faults stored or "No fault recognised" will be displayed.

```
X Faults recognised!
```

```
No fault recognised!
```

- Press ⇒ key.

  The stored faults are displayed and printed out one after the other.

- Go to the Fault table on Page 19 with the fault information print-out.

  As with "No fault recognised", the programme returns to the start position after pressing the ⇒key:

-> Indicated on display; (Function selection)

```
Rapid data transfer                HELP
Select function XX
```

- End output (Function 06) => Page 24 .
- Switch off ignition and unplug diagnostic connectors.

Notes:

Work sequence if a fault has been detected:

1. Rectify fault using fault table => Page 19
2. Interrogate fault memory (Function 02)
3. Erase fault memory (Function 05)
4. End output (Function 06)
5. Perform a test drive
6. Interrogate fault memory again

4.8 - Automatic test sequence

The automatic test sequence interrogates all the fault memories of the control units.

- Switch on ignition.

-> Indicated on display:

```
V.A.G - SELF-DIAGNOSIS     HELP
1 - Rapid data transfer1)
2 - Flash code output1)
```

1) Is displayed alternately

Protected by copyright. Copyright by Volkswagen AG. Volkswagen AG does not guarantee or accept any liability with respect to the correctness of information in this document. Copyright by Volkswagen AG. Copying for private or commercial purposes, in part or in whole, is not permitted unless authorised by Volkswagen AG.
satelettronica

- Press key -1- for "Rapid data transfer" operating mode.
- Switch on printer with the Print key (indicator lamp in key lights up).

-> Indicated on display:

```
Rapid data transfer      HELP
Select function XX
```

- Press key -0- twice; 00 enters the "Interrogate automatic test sequence" function.
- Confirm entry with Q key.

-> In the display of fault reader 1551, the engine control unit identification is displayed first e.g.

```
032906026BT      1.6l      R4      MONO
1.3      D1      TEV
Coding 00002      WSC XXXXX
```

Thereafter all control unit identifications with possible fault memory entries are displayed:

4.9 - Fault table

Notes on fault table

- All the possible faults which can be recognised by the ABS control unit (J104) and printed-out on V.A.G 1551, are listed on the following pages according to the 5 digit fault code.
- Fault code appears (in the "Rapid data transfer" mode) only on the print-out.

Example:	
Fault code	Fault type code
5 digit	3 digit
00283	035

- The 3 digit fault type code next to the fault code is a data code which can be disregarded. But the fault type text is of consequence.
- Reference is made to individual test steps of the Electrical test in the column "Rectifying fault".
- Before replacing components indicated as being faulty, check all the appropriate connectors, wiring and earth connections using the current flow diagram.
- After carrying out repairs, always interrogate and erase the fault memory with fault reader V.A.G 1551, also carry out a road test (exceeding a speed of 20 km/h (13 mph)).
- After the road test interrogate fault memory again.

V.A.G 1551 print-out	Possible cause of fault	Rectifying fault
No fault recognised	If "No fault recognised" appears after carrying out repairs, self diagnosis is ended. If, despite "No fault recognised" appearing in the display, the ABS system does not function properly, then proceed as follows: 1. Carry out road test exceeding 20 km/h (13 mph), 2. Again interrogate fault memory, if there is still no fault stored, 3. Commence fault finding without self-diagnosis and work through the complete Electrical check => Page 41 .	

V.A.G 1551 print-out	Possible cause of fault	Rectifying fault
00283 Front left speed sensor -G47	- Open circuit, short to positive or earth or a loose contact in wiring between speed sensor -G47 and the control unit -J104 - Damaged rotor or speed sensor -G47 - Speed sensor windings -G47- defective	- Check wiring, connections and speed sensor: =>Electrical test,Page 41 , Test steps 6 and 10 - Check speed sensor -G47- and rotor for damage Renew rotor/speed sensor -G47

satelettronica

V.A.G 1551 print-out	Possible cause of fault	Rectifying fault
		=> Brake systems; Repair group 45; Removing and installing parts of ABS system on front and rear axles Removing and installing parts of ABS system on front and rear axles
		If the fault occurs again:
	- ABS control unit -J104- defective	- Renew control unit -J104
		=> Brake systems; Repair group 45

V.A.G 1551 print-out	Possible cause of fault	Rectifying fault
00283 Front left speed sensor -G47 Signal outside tolerance1)	- Open circuit, short to positive or earth or a loose contact in wiring between speed sensor -G47 and the control unit -J104 - Electrical interference from an external source (high frequency radiation e.g. non-insulated ignition cables)	- Check wiring, connections and speed sensor: =>Electrical test,Page 26 Display group number 001
	- Damaged rotor or speed sensor -G47	
	- Excessive air gap between speed sensor -G47- and rotor (signal not OK.)	- Check speed sensor -G47- and rotor for damage Renew rotor/speed sensor
		=> Brake systems; Repair group 45; Removing and installing parts of ABS system on front and rear axles Removing and installing parts of ABS system on front and rear axles

1) Type of fault, this fault is only recognised above 20 km/h (13 mph) (carry out test drive).

V.A.G 1551 print-out	Possible cause of fault	Rectifying fault
00283 Front left speed sensor -G47 Mechanical fault1)	- Excessive air gap between speed sensor -G47- and rotor (signal not OK.)	- Check installation of speed sensor -G47- and rotor => Brake systems; Repair group 45; Removing and installing parts of ABS system on front and rear axles 29
		If the fault occurs again:
	- Outlet valve in hydraulic unit -N55- defective	- Renew hydraulic unit -N55
		=> Brake systems; Repair group 45

1) Type of fault, this fault is only recognised above 20 km/h (13 mph) (carry out test drive).

V.A.G 1551 print-out	Possible cause of fault	Rectifying fault
00285 Front right speed sensor -G45	- Open circuit, short to positive or earth or a loose contact in wiring between speed sensor -G45 and the control unit -J104	- Check wiring, connections and speed sensor: =>Electrical test,Page 41 , Test steps 5 and 9
	- Damaged rotor or speed sensor -G45 - Speed sensor windings -G45- defective	- Check speed sensor -G45- and rotor for damage Renew rotor/speed sensor -G45
		=> Brake systems; Repair group 45; Removing and installing parts of ABS system on front and rear axles Removing and installing parts of ABS system on front and rear axles
		If the fault occurs again:

satelettronica

V.A.G 1551 print-out	Possible cause of fault	Rectifying fault
	- ABS control unit -J104- defective	- Renew control unit -J104 => Brake systems; Repair group 45

V.A.G 1551 print-out	Possible cause of fault	Rectifying fault
00285 Front right speed sensor -G45 Signal outside tolerance1)	- Open circuit, short to positive or earth or a loose contact in wiring between speed sensor -G45 and the control unit -J104 - Electrical interference from an external source (high frequency radiation e.g. non-insulated ignition cables) - Damaged rotor or speed sensor -G45 - Excessive air gap between speed sensor -G45- and rotor (signal not OK.)	- Check wiring, connections and speed sensor: =>Electrical test,Page 26 Display group number 001 - Check speed sensor -G45- and rotor for damage Renew rotor/speed sensor => Brake systems; Repair group 45; Removing and installing parts of ABS system on front and rear axles Removing and installing parts of ABS system on front and rear axles

1) Type of fault, this fault is only recognised above 20 km/h (13 mph) (carry out test drive).

V.A.G 1551 print-out	Possible cause of fault	Rectifying fault
00285 Front right speed sensor -G45 Mechanical fault1)	- Excessive air gap between speed sensor -G45- and rotor (signal not OK.) - Outlet valve in hydraulic unit -N55- defective	- Check installation of speed sensor -G45- and rotor => Brake systems; Repair group 45; Removing and installing parts of ABS system on front and rear axles 29 If the fault occurs again: - Renew hydraulic unit -N55 => Brake systems; Repair group 45

1) Type of fault, this fault is only recognised above 20 km/h (13 mph) (carry out test drive).

V.A.G 1551 print-out	Possible cause of fault	Rectifying fault
00287 Rear right speed sensor -G44	- Open circuit, short to positive or earth or a loose contact in wiring between speed sensor -G44 and the control unit -J104 - Damaged rotor or speed sensor -G44 - Speed sensor windings -G44- defective - ABS control unit -J104- defective	- Check wiring, connections and speed sensor: =>Electrical test,Page 41 , Test steps 7 and 11 - Check speed sensor -G44- and rotor for damage Renew rotor/speed sensor -G44 => Brake systems; Repair group 45; Removing and installing parts of ABS system on front and rear axles Removing and installing parts of ABS system on front and rear axles If the fault occurs again: - Renew control unit -J104 => Brake systems; Repair group 45

V.A.G 1551 print-out	Possible cause of fault	Rectifying fault
00287		

satelettronica

V.A.G 1551 print-out	Possible cause of fault	Rectifying fault
Rear right speed sensor -G44 Signal outside tolerance1)	- Open circuit, short to positive or earth or a loose contact in wiring between speed sensor -G44 and the control unit -J104 - Electrical interference from an external source (high frequency radiation e.g. non-insulated ignition cables) - Damaged rotor or speed sensor -G44 - Excessive air gap between speed sensor -G44- and rotor (signal not OK.)	- Check wiring, connections and speed sensor: =>Electrical test,Page 26 Display group number 001 - Check speed sensor -G44- and rotor for damage Renew rotor/speed sensor => Brake systems; Repair group 45; Removing and installing parts of ABS system on front and rear axles Removing and installing parts of ABS system on front and rear axles

1) Type of fault, this fault is only recognised above 20 km/h (13 mph) (carry out test drive).

V.A.G 1551 print-out	Possible cause of fault	Rectifying fault
00287 Rear right speed sensor -G44 Mechanical fault1)	- Excessive air gap between speed sensor -G44- and rotor (signal not OK.) - Outlet valve in hydraulic unit -N55- defective	- Check installation of speed sensor -G44- and rotor => Brake systems; Repair group 45; Removing and installing parts of ABS system on front and rear axles 29 If the fault occurs again: - Renew hydraulic unit -N55 => Brake systems; Repair group 45

1) Type of fault, this fault is only recognised above 20 km/h (13 mph) (carry out test drive).

V.A.G 1551 print-out	Possible cause of fault	Rectifying fault
00290 Rear left speed sensor -G46	Open circuit, short to positive or earth or a loose contact in wiring between speed sensor -G46 and the control unit -J104 - Speed sensor windings -G46- defective - Damaged rotor or speed sensor -G46 - ABS control unit -J104- defective	- Check wiring, connections and speed sensor: =>Electrical test,Page 41 , Test steps 8 and 12 - Check speed sensor -G46- and rotor for damage Renew rotor/speed sensor -G46 => Brake systems; Repair group 45; Removing and installing parts of ABS system on front and rear axles Removing and installing parts of ABS system on front and rear axles If the fault occurs again: - Renew control unit -J104 => Brake systems; Repair group 45

V.A.G 1551 print-out	Possible cause of fault	Rectifying fault
00290 Rear left speed sensor -G46 Signal outside tolerance1)	Open circuit, short to positive or earth or a loose contact in wiring between speed sensor -G46 and the control unit -J104 - Electrical interference from an external source (high frequency radiation e.g. non-insulated ignition cables)	- Check wiring, connections and speed sensor: =>Electrical test,Page 26 Display group number 001

Copyright by Volkswagen AG. Volkswagen AG does not guarantee or accept any liability with respect to the correctness of information in this document. Copyright by Volkswagen AG. Reproduction, in whole or in part, for private or commercial purposes, is not permitted unless authorised by Volkswagen AG.
satelettronica

V.A.G 1551 print-out	Possible cause of fault	Rectifying fault
	- Damaged rotor or speed sensor -G46 - Excessive air gap between speed sensor -G46- and rotor (signal not OK.)	- Check speed sensor -G46- and rotor for damage Renew rotor/speed sensor => Brake systems; Repair group 45; Removing and installing parts of ABS system on front and rear axles Removing and installing parts of ABS system on front and rear axles

1) Type of fault, this fault is only recognised above 20 km/h (13 mph) (carry out test drive).

V.A.G 1551 print-out	Possible cause of fault	Rectifying fault
00290 Rear left speed sensor -G46 Mechanical fault1)	- Excessive air gap between speed sensor -G46- and rotor (signal not OK.) - Outlet valve in hydraulic unit -N55- defective	- Check installation of speed sensor -G46- and rotor => Brake systems; Repair group 45; Removing and installing parts of ABS system on front and rear axles 29 If the fault occurs again: - Renew hydraulic unit -N55 => Brake systems; Repair group 45

1) Type of fault, this fault is only recognised above 20 km/h (13 mph) (carry out test drive).

V.A.G 1551 print-out	Possible cause of fault	Rectifying fault
00668 Vehicle voltage terminal 30 signal outside tolerance	Defective voltage supply wires, connections, fuses S123 and S124	- Check fuses, wires, connections as well as the voltage supply to control unit: => Electrical check, Page 41 , Test step 2
01044 Control unit incorrectly coded	An incorrect code number has been entered via V.A.G 1551 Bridge in wiring harness from contact 14 to contact 22 has open or short circuit	- Check control unit coding =>Page 41 , Test step 13
01130 ABS operation Signal outside tolerance1)	Electrical interference from external interference sources (high frequency radiation, e.g. non-insulated ignition cable)	Sequence: - Check all wiring and connections for short to positive or earth Erase fault memory Carry out a test drive exceeding 20 km/h (13 mph) Interrogate fault memory again

1) Type of fault, this fault is only recognised above 20 km/h (13 mph) (carry out test drive).

V.A.G 1551 print-out	Possible cause of fault	Rectifying fault
01276 ABS hydraulic pump -V64 Signal outside tolerances1)	Connection pump motor to control unit Short to positive or earth or open circuit Pump motor defective	- Check wiring, connections: =>Function 03 Final control diagnosis, Page 41 , Test step 18 If the pump motor runs fault free when performing test step 18, renew control unit.
65535		

Protected by copyright. Copying for private or commercial purposes, in part or in whole, is not permitted unless authorised by Volkswagen AG. Volkswagen AG does not guarantee or accept any liability with respect to the correctness of information in this document. Copyright by Volkswagen AG.
satelettronica

V.A.G 1551 print-out	Possible cause of fault	Rectifying fault
Control unit defective	ABS control unit -J104- defective	- Renew control unit -J104 => Brake systems; Repair group 45; Hydraulic unit, brake servo/brake master cylinder - Assembly overview; Removing and installing control unit and hydraulic unit Hydraulic unit, brake servo/brake master cylinder - Assembly overview; Removing and installing control unit and hydraulic unit

1) Type of fault, this fault is only recognised above 20 km/h (13 mph) (carry out test drive).

4.10 - Erasing fault memory, ending output

Prerequisites:

- Fault memory has been interrogated

1. Erasing fault memory

- Press ⇒ key.

-> Indicated on display
(Clear for function selection)

```
Rapid data transfer      HELP
Select function XX
```

- Press keys -0- and -5-; 05 enters the "Erase fault memory" function.

-> Indicated on display

```
Rapid data transfer      Q
05 - Erase fault memory
```

- Confirm entry with Q key

-> Indicated on display

```
Rapid data transfer
Fault memory is erased!
```

- Press ⇒ key.

-> Indicated on display
(Clear for function selection)

```
Rapid data transfer      HELP
Select function XX
```

```
Warning!
Fault memory has not been interrogated
```

-> If this appears in the display, the test sequence is faulty.

◆ Adhere exactly to test sequence:
First interrogate fault memory, then erase

2. Ending output

- Press keys -0- and -6-, this ends the output.

-> Indicated on display

Protected by copyright. Copying for private or commercial purposes, in part or in whole, is not permitted unless authorised by Volkswagen AG. Volkswagen AG does not guarantee or accept any liability with respect to the correctness of information in this document. Copyright by Volkswagen AG.
satelettronica

```
Rapid data transfer       Q
06 - End output
```

- Confirm entry with Q key

-> Indicated on display

```
Rapid data transfer       Help
Enter address word XX
```

- Switch off ignition.
- Disconnect fault reader V.A.G 1551

- Switch on ignition

ABS warning lamp (K47) and twin circuit brake system/handbrake warning lamp (K7) must go out after approx. 2 seconds.

4.11 - Coding control unit

The control unit in the vehicle is coded. New control units from the parts system are not coded and must be coded after installation.

Coding is only possible after the workshop code (WSC) has been entered into V.A.G 1551.

Special tools, testers and auxiliary items

- Fault reader V.A.G 1551 with cable V.A.G 1551/3

Test sequence

- Connect fault reader V.A.G 1551 and select (address word 03) "Brake electronics" with ignition switched on; => Page 14

-> Indicated on display

```
Rapid data transfer      HELP
Select function XX
```

- Input 07 for the function "Code control unit" and confirm with Q.

-> Indicated on display

```
Rapid data transfer      HELP
07 - Code control unit
```

- Confirm entry with Q key

-> Indicated on display

```
Code control unit      Q
Enter code number      XXXXX      (06406)
```

- Enter relevant code number for vehicle and confirm with Q key.

=> Fault reader V.A.G 1551 operating instructions.

Code table for ABS, ABS/EDL systems 20 GI and 20 IE

Vehicle model	Introduction	Variants	Control unit	Code number
Caddy	to 07.97	ABS	3A0 907 379	06406
Polo Classic		ABS/EDL	3A0 907 379 A	

Protected by copyright. Copying for private or commercial purposes, in part or in whole, is not permitted unless authorised by Volkswagen AG. Volkswagen AG does not guarantee or accept any liability with respect to the correctness of information in this document. Copyright by Volkswagen AG.
satelettronica

Vehicle model		Introduction	Variants	Control unit	Code number
Caddy Polo Classic Polo Estate	to 66 kW to 66 kW to 66 kW	from 08.97	ABS	1J0 907 379 D 1J0 907 379 G	06416
			ABS/EDL	1J0 907 379 E 1J0 907 379 H	
Caddy Polo Classic Polo Estate	from 66 kW from 66 kW from 66 kW	from 08.97	ABS	1J0 907 379 D 1J0 907 379 G	16416
			ABS/EDL	1J0 907 379 E 1J0 907 379 H	

-> The control unit coding appears on the display of the fault reader V.A.G 1551, e.g.:

```
#      Coding 06406      WSC XXXXX
```

- Press ⇒ key.

-> Indicated on display

```
Rapid data transfer      HELP
Select function XX
```

- Input 06 for "End output" function and confirm with Q.

If the control unit has been wrongly coded then the ABS warning lamp (K47) and the twin circuit brake system/ handbrake warning lamp (K7) remain on constantly, simultaneously a fault is entered in the fault memory => Interrogate fault memory 02, Page 17 .

If the control unit is not coded (Code XXXXX), the ABS warning lamp and the twin circuit brake system/hand-brake warning lamp (K7) will flash (once per second).

4.12 - Read measured value block

The control unit can transfer a considerable amount of test data. This test data delivers information about the operational condition of the system and/or sensors connected. In many cases the transferred test data supports fault finding and rectification. The test data has been summarized into single display groups because all the information cannot be evaluated at the same time. The information can be selected via display group numbers.

- Connect fault reader V.A.G 1551 and select (address word 03) "Brake electronics" with ignition switched on; => Page 14

-> Indicated on display:

```
Rapid data transfer      HELP
Select function XX
```

- Press keys 0 and 8. (The function "Read measured value block" is initiated with 08.)

-> Indicated on display:

```
Rapid data transfer      Q
08 - Read measured value block
```

- Confirm entry with key Q.

-> Indicated on display:

```
Read measured value block
Enter display group number XXX
```

- Enter display group number => List of selectable display group numbers, Page 27 .

Protected by copyright. Copyright by Volkswagen AG. Volkswagen AG does not permit unless authorised by Volkswagen AG. Volkswagen AG does not guarantee or accept any liability with respect to the correctness of information in this document. Copyright by Volkswagen AG.
satelettronica

List of selectable display group numbers

Display group number	Display zone	Designation
001	1	Wheel speed at front left wheel sensor (km/h)
	2	Wheel speed at front right wheel sensor (km/h)
	3	Wheel speed at rear left speed sensor (km/h)
	4	Wheel speed at rear right speed sensor (km/h)
002	1	Wheel speed at front left wheel sensor (km/h)
	2	Wheel speed at front right wheel sensor (km/h)
	3	Wheel speed at rear left speed sensor (km/h)
	4	Wheel speed at rear right speed sensor (km/h)
003	1	Brake light switch
	2	Vacant
	3	Vacant
	4	Vacant

Test sequence and test tables with measured values

Checking speed sensor allocation

Display group number 001

- Press keys 0, 0 and 1
- Confirm entry with key Q.

```
Read measured value block          1
□ 1     □      2      3      □ 4
```

-> There are always 4 display zones -arrows- in the measured value block. Decoding the individual values in display zones 1 to 4 can be read-off from the following tables.

-> Indicated on display: (vehicle stationary)

```
Read measured value block     1     "
0 km/h     0 km/h     0 km/h     0 km/h
```

Press C key for the next display group number entry.

If the ⇒key is pressed, then the keys 0 and 8 must be pressed afterwards to enter "Read measured value block" again.

For display group number 001 remember:

The actual wheel speeds are displayed. They serve to check the speed sensor allocation to the wheel. (The vehicle must be raised and the wheel must be rotated by hand by a 2nd mechanic).

Read measured value block			1 ⇒	Display group number: 001
0 km/h	4 km/h	0 km/h	0 km/h	[ltrif] Indicated on display: (Example)
				Wheel speed at rear right speed sensor - (0...255 km/h)
				Wheel speed at rear left speed sensor - (0...255 km/h)
				Wheel speed at front right speed sensor - (0...255 km/h)
				Wheel speed at front left speed sensor - (0...255 km/h)

satelettronica

Checking speed sensor

Display group number 002

Reading the measured value block for display group number 002 must be undertaken when the vehicle is being driven slowly. When doing this the control unit -J104 saves the first usable voltage signal from speed sensor and displays this in the measured value block. The values are displayed on the V.A.G 1551 when the vehicle is being driven slowly.

- Press keys 0, 0 and 2
- Confirm entry with key Q.

```
Read measured value block          2
□ 1     □      2      3      □ 4
```

-> There are always 4 display zones -arrows- in the measured value block. Decoding the individual values in display zones 1 to 4 can be read-off from the following tables.

-> Indicated on display: (Vehicle stationary)

```
Read measured value block     2      "
255 km/h     255 km/h     255 km/h     255
km/h
```

Press C key for the next display group number entry.

If the ⇒key is pressed, then the keys 0 and 8 must be pressed afterwards to enter "Read measured value block" again.

For display group number 002 remember:

Deviations in display zones 1 to 2 of the displayed values may on no account be above 6 km/h.

Deviations in display zones 3 to 4 of the displayed values may on no account be above 2 km/h.

Read measured value block 2 ⇒	Display group number: 002
3 km/h1) 6 km/h1) 2 km/h2) 1 km/h2)	[Itrif] Indicated on display: (when driving slowly)
	Wheel speed at rear right speed sensor - (0...255 km/h)
	Wheel speed at rear left speed sensor - (0...255 km/h)
	Wheel speed at front right speed sensor - (0...255 km/h)
	Wheel speed at front left speed sensor - (0...255 km/h)

1) If the deviations in display zones 1 to 2 are greater than 6 km/h the following may be the fault cause:

2) If the deviations in display zones 3 to 4 are greater than 2 km/h the following may be the fault cause:

- Air gap between speed sensor and rotor may be too big.

- Check that speed sensor is screwed correctly to wheel bearing housing.

- Wheel bearing play not correct.

- Check wheel bearing play at relevant wheel and adjust if necessary.

- Speed sensor or rotor exterior damaged.

- Change damaged component.

Protected by copyright. Copying for private or commercial purposes, in part or in whole, is not permitted unless authorised by Volkswagen AG. Volkswagen AG does not guarantee or accept any liability with respect to the correctness of information in this document. Copyright by Volkswagen AG.

satelettronica

Checking brake light switch for ABS and ABS/EDL function

Display group number 003

- Press keys 0, 0 and 3
- Confirm entry with key Q.

```
Read measured value block          3
□ 1    □      2      3      □ 4
```

-> There are always 4 display zones -arrows- in the measured value block. Decoding the individual values in display zones 1 to 4 can be read-off from the following tables.

-> Indicated on display:

```
Read measured value block      3      - "
     0
```

Press C key for the next display group number entry.

If the ⇒key is pressed, then the keys 0 and 8 must be pressed afterwards to enter "Read measured value block" again.

Read measured value block 0	3 ⇒	Display group number: 003 [Itrif] Indicated on display
Vacant Vacant Vacant Brake light switch: - 0 ⇒Brake pedal not depressed - 1 ⇒Brake pedal depressed If despite depressed foot brake a -0- or not depressed foot brake a -1- is displayed on the V.A.G 1551 display, perform test step No. 4 of Electrical check, Page 55.		

4.13 - Final control diagnosis

- All functions that have so far been carried out with V.A.G 1551 can now also be carried out with the tester VAS 5051.

The pump motor and the correct functioning of the hydraulic circuits (allocation of brake pipes to wheel cylinders and function of valves) can be checked for interchange or leaks with the final control diagnosis.

- The vehicle must be raised until all wheels are free to turn. (2nd mechanic required)
- The -C- key can be used to exit the test sequence at any time.
- After depressing the brake pedal several times the vacuum in the brake servo will be exhausted. Therefore more pressure must be applied to the brake pedal in order to attain the same fluid pressure in brake system, as that attained with vacuum.
- When vacuum in brake servo is exhausted it can happen that the wheels do not lock;start engine and build-up vacuum in brake servo.

Example:

Indicated on V.A.G 1551 display during final control diagnosis

(e.g. front left wheel, FL)

```
Final control diagnosis - ⇒
IFL: VBAT OFL: 0V Wheel FL locked
```

IFL = Inlet valve Front Left

VBAT = Voltage Battery; Voltage at valve

Copyright. Volkswagen AG. Volkswagen AG does not guarantee or accept any liability with respect to the correctness of information in this document. Copying for private or commercial purposes, in part or in whole, is not permitted unless authorised by Volkswagen AG.

satelettronica

OFL = Outlet valve Front Left

0V = 0 Volt; No voltage at valve

Locked/free = Wheel condition; must be checked by 2nd mechanic if required

Final control diagnosis - ⇒ EDL valves/Hyd-P: VBAT Wheel FL/FR locked

Hydr-P = Hydraulic pump

- Connect fault reader V.A.G 1551.
- Switch on ignition.
- Press key -1- for "Rapid data transfer" operating mode.
- Select brakes electronic control unit (address word 03); => Page 14

-> Indicated on display:

```
Rapid data transfer      Q
03 - Brake electronics
```

- Confirm entry with key Q.

During the next work sequence the ABS warning lamp -K47- and twin circuit brake system/handbrake warning lamp -K7- flash 4 times per second.

- Read off control unit version in V.A.G 1551 display.
- Press ⇒ key.

-> Indicated on display

```
Rapid data transfer      HELP
Select function XX
```

- Press keys 0 and 3

-> Indicated on display

```
Rapid data transfer      Q
03 - Final control diagnosis
```

- Confirm entry with key Q.

ABS hydraulic pump -V64 must run.

-> Indicated on display

```
Final control diagnosis      -
ABS hydraulic pump - V64
```

- Press ⇒ key within next 60 seconds

-> Indicated on display

```
Final control diagnosis      -
Operate brakes
```

- Operate brake pedal.
- Press ⇒ key.

-> Indicated on display

```
Final control diagnosis      -
IFL: 0V     OFL: 0V          Wheel FL
locked
```

- Indicate to 2nd mechanic which wheel requires turning by hand.

Protected by copyright. Copyright by Volkswagen AG. Volkswagen AG does not guarantee or accept any liability with respect to the correctness of information in this document. Copyright by Volkswagen AG. Reproduced by Volkswagen AG. Volkswagen AG does not guarantee or accept any liability with respect to the correctness of information in this document. Copyright by Volkswagen AG. Protected by copyright. Copying for private and commercial purposes, in part or in whole, is not permitted unless authorised by Volkswagen AG.
satelettronica

If the wheel does not lock, there is a possibility that there is a fault in the mechanical/hydraulic part of the brake system.

- Press ⇒ key.

-> Indicated on display

```
Final control diagnosis      -
IFL: VBAT     OFL: 0V          Wheel FL
locked
```

- Press ⇒ key.

ABS hydraulic pump -V64 must run.

Brake pedal must not give.

If the brake pedal gives, there is a fault in the hydraulic unit. In this case the hydraulic unit must be replaced.

=> Brake system; Repair group 45

-> Indicated on display

```
Final control diagnosis      -
IFL: VBAT     OFL: VBAT          Wheel FL
free
```

- Indicate to 2nd mechanic which wheel requires turning by hand.

If the wheellocksthere is a possibility that the brake pipes to the wheel calipers/cylinders have been interchanged.

- Press ⇒ key.

ABS hydraulic pump -V64 runs no longer

-> Indicated on display

```
Final control diagnosis      -
IFL: VBAT     OFL: 0V          Wheel FL
free
```

- Press ⇒ key.

Brake pedal must give perceptibly

If the brake pedal does notgive, there is a fault in the hydraulic unit. In this case the hydraulic unit must be replaced.

=> Brake system; Repair group 45

-> Indicated on display

```
Final control diagnosis      -
IFL: 0V     OFL: 0V          Wheel FL
locked
```

- Indicate to 2nd mechanic which wheel requires turning by hand.

If the wheel does not lock, there is a possibility that there is a fault in the mechanical/hydraulic part of the brake system.

- Press ⇒ key.

-> Indicated on display

```
Final control diagnosis      -
Release brakes
```

Protected by copyright. Copyright by Volkswagen AG. Copying for private or commercial purposes, in part or in whole, is not permitted unless authorised by Volkswagen AG. Volkswagen AG does not guarantee or accept any liability with respect to the correctness of information in this document.
satelettronica

- Remove foot from brake pedal.
- Press ⇒ key.

-> Indicated on display

```
Final control diagnosis      -
Operate brakes
```

- Operate brake pedal.
- Press ⇒ key.

-> Indicated on display

```
Final control diagnosis      -
IFR: 0V     OFR: 0V          Wheel FR
locked
```

- Indicate to 2nd mechanic which wheel requires turning by hand.

If the wheel does not lock, there is a possibility that there is a fault in the mechanical/hydraulic part of the brake system.

- Press ⇒ key.

-> Indicated on display

```
Final control diagnosis      -
IFR: VBAT     OFR: 0V         Wheel FR
locked
```

- Press ⇒ key.

ABS hydraulic pump -V64 must run.

Brake pedal must not give

If the brake pedal gives, there is a fault in the hydraulic unit. In this case the hydraulic unit must be replaced.

=> Brake system; Repair group 45

-> Indicated on display

```
Final control diagnosis      -
IFR: VBAT     OFR: VBAT          Wheel
FR     free
```

- Indicate to 2nd mechanic which wheel requires turning by hand.

If the wheellocksthere is a possibility that the brake pipes to the wheel calipers/cylinders have been interchanged.

- Press ⇒ key.

ABS hydraulic pump -V64 runs no longer

-> Indicated on display

```
Final control diagnosis      -
IFR: VBAT     OFR: 0V          Wheel FR
free
```

- Press ⇒ key.

Brake pedal must give perceptibly

If the brake pedal does notgive, there is a fault in the hydraulic unit. In this case the hydraulic unit must be replaced.

Protected by copyright. Copying for private or commercial purposes, in part or in whole, is not permitted unless authorised by Volkswagen AG. Volkswagen AG does not guarantee or accept any liability with respect to the correctness of information in this document. Copyright by Volkswagen AG.
satelettronica

=> Brake system; Repair group 45

-> Indicated on display

```
Final control diagnosis      -
IFR: 0V     OFR: 0V          Wheel FR
locked
```

- Indicate to 2nd mechanic which wheel requires turning by hand.

If the wheel does not lock, there is a possibility that there is a fault in the mechanical/hydraulic part of the brake system.

- Press ⇒ key.

-> Indicated on display

```
Final control diagnosis      -
Release brakes
```

- Remove foot from brake pedal.
- Press ⇒ key.

-> Indicated on display

```
Final control diagnosis      -
Operate brakes
```

- Operate brake pedal.
- Press ⇒ key.

-> Indicated on display

```
Final control diagnosis      -
IRL: 0V     ORL: 0V          Wheel RL
locked
```

- Indicate to 2nd mechanic which wheel requires turning by hand.

If the wheel does not lock, there is a possibility that there is a fault in the mechanical/hydraulic part of the brake system.

- Press ⇒ key.

-> Indicated on display

```
Final control diagnosis      -
IRL: VBAT     ORL: 0V         Wheel RL
locked
```

- Press ⇒ key.

ABS hydraulic pump-V64 must run.

Brake pedal must not give

If the brake pedal gives, there is a fault in the hydraulic unit. In this case the hydraulic unit must be replaced.

=> Brake system; Repair group 45

-> Indicated on display

```
Final control diagnosis      -
IRL: VBAT     ORL: VBAT          Wheel
RL     free
```

- Indicate to 2nd mechanic which wheel requires turning by hand.

Protected by copyright. Copying for private or commercial purposes, in part or in whole is not permitted unless authorised by Volkswagen AG. Volkswagen AG does not guarantee or accept any liability with respect to the correctness of information in this document. Copyright by Volkswagen AG.
satelettronica

If the wheellocksthere is a possibility that the brake pipes to the wheel calipers/cylinders have been interchanged.

- Press ⇒ key.

ABS hydraulic pump -V64 runs no longer

-> Indicated on display

```
Final control diagnosis      -
IRL: VBAT     ORL: 0V         Wheel RL
free
```

- Press ⇒ key.

Brake pedal must give perceptibly

If the brake pedal does notgive, there is a fault in the hydraulic unit. In this case the hydraulic unit must be replaced.

=> Brake system; Repair group 45

-> Indicated on display

```
Final control diagnosis      -
IRL: 0V     ORL: 0V          Wheel RL
locked
```

- Indicate to 2nd mechanic which wheel requires turning by hand.

If the wheel does not lock, there is a possibility that there is a fault in the mechanical/hydraulic part of the brake system.

- Press ⇒ key.

-> Indicated on display

```
Final control diagnosis
Release brakes
```

- Remove foot from brake pedal.
- Press ⇒ key.

-> Indicated on display

```
Final control diagnosis      -
Operate brakes
```

- Operate brake pedal.
- Press ⇒ key.

-> Indicated on display

```
Final control diagnosis      -
IRR: 0V     ORR: 0V          Wheel RR
locked
```

- Indicate to 2nd mechanic which wheel requires turning by hand.

If the wheel does not lock, there is a possibility that there is a fault in the mechanical/hydraulic part of the brake system.

- Press ⇒ key.

-> Indicated on display

```
Final control diagnosis      -
IRR: VBAT     ORR: 0V         Wheel RR
locked
```

Protected by copyright. Copying for private or commercial purposes, in whole or in part, is not permitted unless authorised by Volkswagen AG. Volkswagen AG does not guarantee or accept any liability with respect to the correctness of information in this document. Copyright by Volkswagen AG.
satelettronica

- Press ⇒ key.

ABS hydraulic pump -V64 must run.

Brake pedal must not give

If the brake pedal gives, there is a fault in the hydraulic unit. In this case the hydraulic unit must be replaced.

=> Brake system; Repair group 45

-> Indicated on display

```
Final control diagnosis      -
IRR: VBAT     ORR: VBAT          Wheel
RR     free
```

- Indicate to 2nd mechanic which wheel requires turning by hand.

If the wheellocksthere is a possibility that the brake pipes to the wheel calipers/cylinders have been interchanged.

- Press ⇒ key.

ABS hydraulic pump -V64 runs no longer

-> Indicated on display

```
Final control diagnosis      -
IRR: VBAT     ORR: 0V          Wheel RR
free
```

- Press ⇒ key.

Brake pedal must give perceptibly

If the brake pedal does notgive, there is a fault in the hydraulic unit. In this case the hydraulic unit must be replaced.

=> Brake system; Repair group 45

-> Indicated on display

```
Final control diagnosis      -
IRR: 0V     ORR: 0V    Wheel RR     locked
```

- Indicate to 2nd mechanic which wheel requires turning by hand.

If the wheel does not lock, there is a possibility that there is a fault in the mechanical/hydraulic part of the brake system.

- Press ⇒ key.

-> Indicated on display

```
Final control diagnosis      -
Release brakes
```

- Remove foot from brake pedal.
- Press ⇒ key.

-> Indicated on display (vehicles with EDL)

```
Final control diagnosis      -
EDL valves/Hyd-P: VBAT Wh FL/FR locked
```

- A 2nd mechanic is required to rotate the respective wheel by hand.

Protected by copyright. Copying for private or commercial purposes, in part or in whole, is not permitted unless authorised by Volkswagen AG. Volkswagen AG does not guarantee or accept any liability with respect to the correctness of information in this document. Copyright by Volkswagen AG.
satelettronica

If the wheels do not lock, there is a fault in the hydraulic part of the ABS system. In this case the hydraulic unit must be replaced.

=> Brake system; Repair group 45

- Press ⇒ key.

The ABS warning lamp -K47- and the twin circuit brake system/handbrake warning lamp -K7- go out.

-> Indicated on display

```
Function is unknown or
cannot be carried out at the moment
```

The final control diagnosis is completed

- Press ⇒ key.

-> Indicated on display

```
Rapid data transfer      HELP
Select function XX
```

- If the ABS warning lamp -K47 does not go out then there is a fault in the system
- Adhere exactly to test sequence: First interrogate fault memory, then erase

- End output (Function 06) => Page 24 .

4.14 - Initiating basic setting

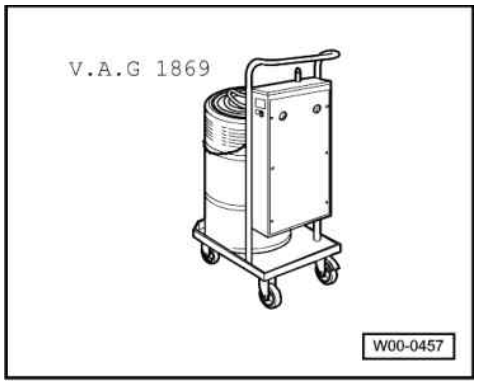

Special tools and workshop equipment required

- V.A.G 1869 Brake filling and bleeder unit

Warning!
Ensure that a filling pressure of 1 bar is not exceeded, when filling with brake fluid using filler and bleeder units e.g. V.A.G 1869.

On vehicles with EDL the basic setting is used to bleed the hydraulic unit.

Basic setting is only necessary when at least one brake fluid reservoir chamber is completely empty.

Basic settings must also be carried out after a leaking brake system has been serviced.

- Connect brake filling and bleeder unit V.A.G 1869.
- Connect fault reader V.A.G 1551 and select (address word 03) "Brake electronics" with ignition switched on; => Page 14

-> Indicated on display

satelettronica

```
Rapid data transfer      HELP
Select function XX
```

- Press keys 0 and 4. (The function "Initiating basic setting" is selected with 04).

-> Indicated on display:

```
Rapid data transfer       Q
04 - Basic setting
```

- Confirm entry with key Q.

-> Indicated on display:

```
Basic setting      HELP
Enter display group number XXX
```

- Press keys 0, 0 and 1
- Confirm entry with key Q.

The following work sequence must be performed 8 times as per basic setting instructions from V.A.G 1551 or VAS 5051.

-> Indicated on display:

```
System in basic setting      1
Depress pedal and hold...
```

Operate pedal with substantial foot pressure and hold.

- Pedal moves down
- Hydraulic pump runs
- Pedal comes back

-> Indicated on display:

```
System in basic setting      1
Rel. pedal; FR/FL bleed screw OPEN
```

- Press key 3

-> Indicated on display:

```
System in basic setting      2
Please wait...(10 secs.)
```

Hydraulic pump runs

-> Indicated on display:

```
System in basic setting      2
Depr. pedal 10X; bleed screw CLOSED
```

- Press key 3

-> Indicated on display:

```
System in basic setting      3
Depress pedal and hold...
```

Operate pedal with substantial foot pressure and hold.

- Pedal moves down
- Hydraulic pump runs
- Pedal comes back

-> Indicated on display:

```
System in basic setting      3
Rel. pedal; FR/FL bleed screw OPEN
```

Protected by copyright. Copying for private or commercial purposes, in part or in whole, is not permitted unless authorised by Volkswagen AG. Volkswagen AG does not guarantee or accept any liability with respect to the correctness of information in this document. Copyright by Volkswagen AG.
satelettronica

- Press key 3

-> Indicated on display:

```
System in basic setting     4
Please wait...(10 secs.)
```

Hydraulic pump runs

-> Indicated on display:

```
System in basic setting     4
Depr. pedal 10X; bleed screw CLOSED
```

- Press key 3

-> Indicated on display:

```
System in basic setting     5
Depress pedal and hold...
```

Operate pedal with substantial foot pressure and hold.

- Pedal moves down
- Hydraulic pump runs
- Pedal comes back

-> Indicated on display:

```
System in basic setting     5
Rel. pedal; FR/FL bleed screw OPEN
```

- Press key 3

-> Indicated on display:

```
System in basic setting     6
Please wait...(10 secs.)
```

Hydraulic pump runs

-> Indicated on display:

```
System in basic setting     6
Depr. pedal 10X; bleed screw CLOSED
```

- Press key 3

-> Indicated on display:

```
System in basic setting     7
Depress pedal and hold...
```

Operate pedal with substantial foot pressure and hold.

- Pedal moves down
- Hydraulic pump runs
- Pedal comes back

-> Indicated on display:

```
System in basic setting     7
Rel. pedal; FR/FL bleed screw OPEN
```

- Press key 3

-> Indicated on display:

```
System in basic setting     8
Please wait...(10 secs.)
```

Protected by copyright. Copyright by Volkswagen AG. Volkswagen AG does not guarantee or accept any liability with respect to the correctness of information in this document. Copyright by Volkswagen AG.
satelettronica

Hydraulic pump runs

-> Indicated on display:

```
System in basic setting     8
Depr. pedal 10X; bleed screw CLOSED
```

- Press key 3

-> Indicated on display:

```
System in basic setting     9
Depress pedal and hold...
```

Operate pedal with substantial foot pressure and hold.

- Pedal moves down
- Hydraulic pump runs
- Pedal comes back

-> Indicated on display:

```
System in basic setting     9
Rel. pedal; FR/FL bleed screw OPEN
```

- Press key 3

-> Indicated on display:

```
System in basic setting     10
Please wait...(10 secs.)
```

Hydraulic pump runs

-> Indicated on display:

```
System in basic setting     10
Depr. pedal 10X; bleed screw CLOSED
```

- Press key 3

-> Indicated on display:

```
System in basic setting     11
Depress pedal and hold...
```

Operate pedal with substantial foot pressure and hold.

- Pedal moves down
- Hydraulic pump runs
- Pedal comes back

-> Indicated on display:

```
System in basic setting     11
Rel. pedal; FR/FL bleed screw OPEN
```

- Press key 3

-> Indicated on display:

```
System in basic setting     12
Please wait...(10 secs.)
```

Hydraulic pump runs

-> Indicated on display:

```
System in basic setting     12
Depr. pedal 10X; bleed screw CLOSED
```

Protected by copyright. Copying for private or commercial purposes, in part or in whole, is not permitted unless authorised by Volkswagen AG. Volkswagen AG does not guarantee or accept any liability with respect to the correctness of information in this document. Copyright by Volkswagen AG.
satelettronica

- Press key 3

-> Indicated on display:

```
System in basic setting     13
Depress pedal and hold...
```

Operate pedal with substantial foot pressure and hold.

- Pedal moves down
- Hydraulic pump runs

-> Indicated on display:

```
System in basic setting     13
Rel. pedal; FR/FL bleed screw OPEN
```

- Press key 3

-> Indicated on display:

```
System in basic setting     14
Please wait...(10 secs.)
```

Hydraulic pump runs

-> Indicated on display:

```
System in basic setting     14
Depr. pedal 10X; bleed screw CLOSED
```

- Press key 3

-> Indicated on display:

```
System in basic setting     15
Depress pedal and hold...
```

Operate pedal with substantial foot pressure and hold.

- Pedal moves down
- Hydraulic pump runs
- Pedal comes back

-> Indicated on display:

```
System in basic setting     15
Rel. pedal; FR/FL bleed screw OPEN
```

- Press key 3

-> Indicated on display:

```
System in basic setting     16
Please wait...(10 secs.)
```

Hydraulic pump runs

-> Indicated on display:

```
System in basic setting     16
Depr. pedal 10X; bleed screw CLOSED
```

- Press key 3

-> If allthe eight work sequences have been performed, the following is indicated on the display:

```
System in basic setting     17
Partial bleeding ended
```

Protected by copyright. Copying for private or commercial purposes, in part or in whole, is not permitted unless authorised by Volkswagen AG. Volkswagen AG does not guarantee or accept any liability with respect to the correctness of information in this document. Copyright by Volkswagen AG.
satelettronica

- Press ⇒ key.

-> Indicated on display

```
Rapid data transfer      HELP
Select function XX
```

- Press keys -0- and -6-, this ends the output.

-> Indicated on display:

```
Rapid data transfer       Q
06 - End output
```

- Confirm entry with Q key

-> Indicated on display

```
Rapid data transfer       Help
Enter address word XX
```

- Press C key
- Switch off ignition.
- Disconnect fault reader V.A.G 1551

Then the brake system must be bled.

=> Brake systems; Repair group 47; Bleeding brake system, vehicles with and without ABS Bleeding brake system, vehicles with and without ABS

5 - Electrical check of ABS, ABS/EDL ITT Mark 20 GI and ITT Mark 20 IE

5.1 - Electrical check of ABS, ABS/EDL ITT Mark 20 GI and ITT Mark 20 IE

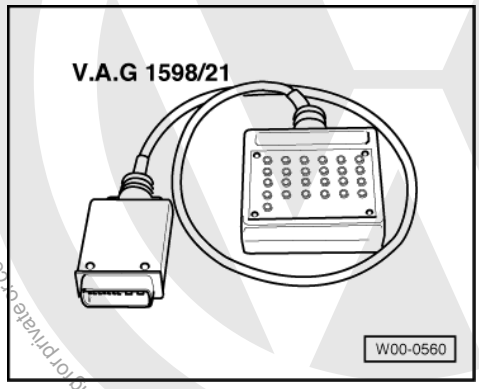

Special tools and workshop equipment required

- V.A.G 1598/21 Adapter

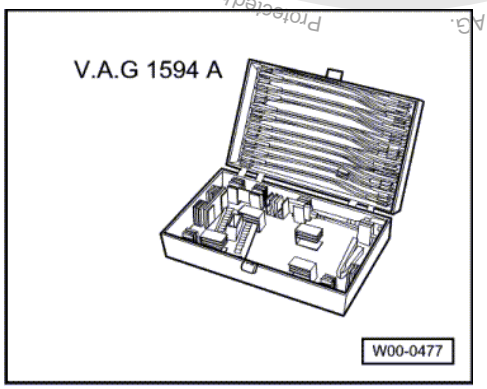

Protected by copyright. Copying for private or commercial purposes, in part or in whole, is not permitted unless authorised by Volkswagen AG. Volkswagen AG does not guarantee or accept any liability with respect to the correctness of information in this document. Copyright by Volkswagen AG.
satelettronica

Protected by copyright. Copyright by Volkswagen AG. Volkswagen AG does not guarantee or accept any liability with respect to the correctness of information in this document. Copyright by Volkswagen AG. Copying for private or commercial purposes, in part or in whole, is not permitted unless authorised by Volkswagen AG.

- V.A.G 1594/ A Adapter set

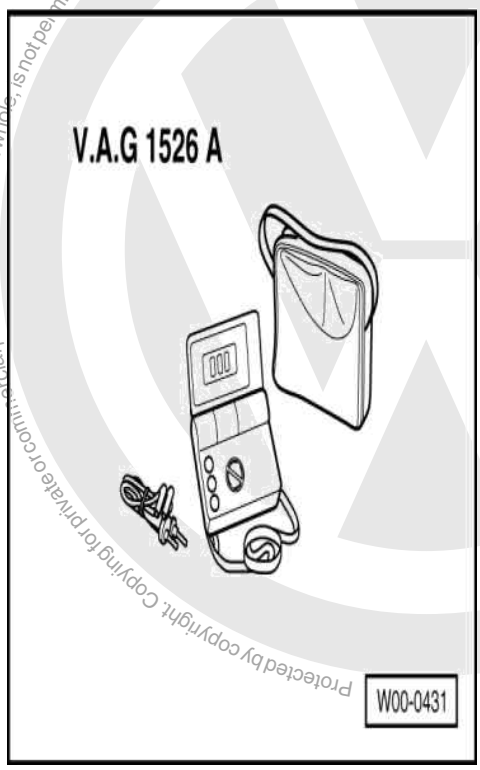

- V.A.G 1526 A Hand multimeter

The test steps => from Page 50 (ITT Mark 20 IE) are valid for:

- For vehicles on which the self diagnosis does not give any indication of the source of the fault. Work through the complete electrical check.
- For vehicles on which the self diagnosis provides a direct indication of the source of the fault. Only carry out the test steps recommended in the fault table (directed entry).

5.2 - Test prerequisites

- Fuses S16, S20, S123 and S124 must be OK (remove fuses from fuse holder to check).

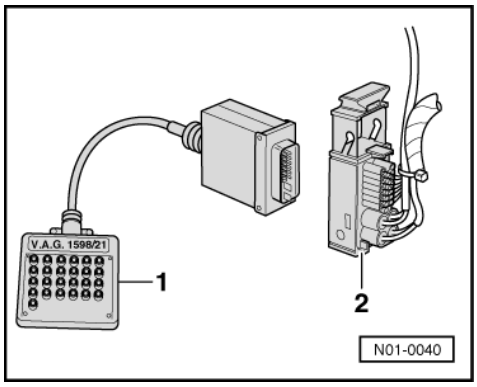

- Switch ignition and electrical consumers off before commencing the check (headlights, lighting, fan ...).
- -> Pull multi-pin connector off control unit (J104) and connect test box V.A.G 1598/21 -1- to wiring loom connector -2-.

The specified values are matched to the V.A.G 1526 and are not necessarily applicable for other test units.

satelettronica

5.3 - Multi-pin connector with contact assignment - ABS, ABS/EDL ITT Mark 20 GI (to 07.97)

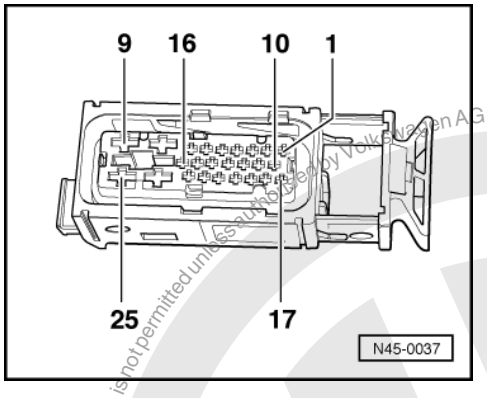

Note:

All contacts not listed are currently not assigned and must never be connected to other components!

-> Contact assignment of connector T25 wiring loom/control unit - J104

Contact	Wiring connection to component ...
1	=> Rear right speed sensor -G44
2	=> Rear left speed sensor -G46
3	=> Front right speed sensor -G45
4	=> Front left speed sensor -G47
8	=> Earth terminal 31
9	=> Battery + via S 124
10	=> Rear left speed sensor -G46
11	=> Front left speed sensor -G47
12	=> Brake light switch -F-

Contact	Wiring connection to component ...
13	=> Connector T16/7, K wire
14	=> Coding bridge to contact 22
16	=> ABS warning lamp activation
17	=> Rear right speed sensor -G44
18	=> Front right speed sensor -G45
22	=> Coding bridge to contact 14
23	=> Voltage supply terminal X
24	=> Earth terminal 31
25	=> Battery + via S 123

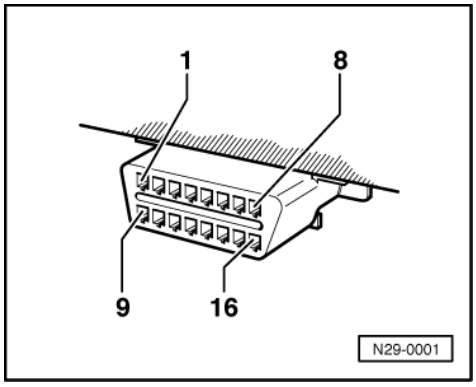

Copyright by Volkswagen AG. Volkswagen AG does not guarantee or accept any liability with respect to the correctness of information in this document. Copyright by Volkswagen AG. Protected by copyright. Copying for private or commercial purposes, in part or in whole, is not permitted unless authorised by Volkswagen AG.
satelettronica

-> Contact assignment of connectors for voltage supply and self-diagnosis with the fault reader V.A.G 1551

Contact 4	= Earth (terminal 31)
Contact 16	= Positive (terminal 30) via S21
Contact 7	= K-wire via wiring junction TV 14 (above relay plate), connector T2/2 to control unit (J104) contact 13

Test step overview

To test component	
Voltage supply for pump motor (terminal 30) on control unit (J104)	- Perform test step 1
Voltage supply for valves (terminal 30) on control unit (J104)	- Perform test step 2
Voltage supply (terminal X) on control unit	- Perform test step 3
Function of brake light switch -F	- Perform test step 4
Front right speed sensor -G45 resistance	- Perform test step 5
Front left speed sensor -G47 resistance	- Perform test step 6

To test component	
Rear right speed sensor -G44 resistance	- Perform test step 7
Rear left speed sensor -G46 resistance	- Perform test step 8
Front right speed sensor -G45 voltage signal	- Perform test step 9
Front left speed sensor -G47 voltage signal	- Perform test step 10
Rear right speed sensor -G44 voltage signal	- Perform test step 11
Rear left speed sensor -G46 voltage signal	- Perform test step 12
Coding bridge	- Perform test step 13
Voltage supply for V.A.G 1551, connector T16	- Perform test step 14
Resistance of K wire for self-diagnosis, connector T16	- Perform test step 15
Warning lamp function for ABS -K47	- Perform test step 16
Warning lamp function for twin circuit brake system and handbrake -K7	- Perform test step 17

5.4 - Test table - ABS, ABS/EDL ITT Mark 20 GI (to 07.97)

Notes on test table

- The socket designations of the test box V.A.G 1598 are identical to the control unit (J104) contact designations in current flow diagram.

=> Current flow diagrams, Electrical fault finding and Fitting locations binder.

- If the readings obtained deviate from the specifications, carry out fault rectification measure in the right-hand part of the table.

=> Current flow diagrams, Electrical fault finding and Fitting locations binder.

- Continuity checks with adapter set V.A.G 1594 (bridging).
- If the measured figures only deviate slightly from the specifications, clean sockets and plugs of the testers and adapter cables (with contact spray G 000 700 04) and repeat check. Before replacing components, check wiring and connections and also, particularly for specifications of less than 10 ω, repeat resistance check on the component.

satelettronica

Switch to measuring range: Voltage measurement (20 V =)					
Test step	V.A.G 1598 sockets	Item tested	▪ Test conditions - Additional operations	Specification	Measures for deviations from specification
1	8 + 25	Voltage supply for pump motor (terminal 30) on control unit (J104)	▪ Ignition switched off	10.0 - 14.5 V	- Check wire from contact 8 to earth. - Check wire from contact 25 via fuse S123 to battery +.
2	9 + 24	Voltage supply for the valves (terminal 30) on control unit (J104)	▪ Ignition switched off	10.0 - 14.5 V	- Check wire from contact 24 to earth. - Check wire from contact 9 via fuse S124 to battery +.

Switch to measuring range: Voltage measurement (20 V =)					
Test step	V.A.G 1598 sockets	Item tested	▪ Test conditions - Additional operations	Specification	Measures for deviations from specification
3	8 + 23	Voltage supply (terminal X) on control unit	▪ Ignition switched on	10.0 - 14.5 V	- Check wire from contact 8 to earth. Check wire from contact 23 to contact W/3 (relay plate).
4	8 + 12	Function of brake light switch (F)	▪ Ignition switched off ▪ Brake pedal not depressed - Depress brake pedal	0.0 - 0.5 V 10.0 - 14.5 V	- Check fuse S20 and brake light switch (F). Check wire from contact 8 to earth. - Check wire from contact 12 to contact W/4 (relay plate).

Switch to measuring range: Resistance measurement (2 kω)					
Test step	V.A.G 1598 sockets	Item tested	▪ Test conditions - Additional operations	Specification	Measures for deviations from specification
5	3 + 18	Resistance of front right speed sensor (G45)	▪ Ignition switched off	1.0...1.3 kω	- Check resistance of speed sensor (1.0...1.3 kω). - Check wire to speed sensor, move wire whilst checking (loose contact).
6	4 + 11	Resistance of front left speed sensor (G47)	▪ Ignition switched off	1,0...1,3 kω	- Check resistance of speed sensor (1.0...1.3 kω) - Check wire to speed sensor, move wire whilst checking (loose contact).

Protected by copyright. Copying for private or commercial purposes, in part or in whole, is not permitted unless authorised by Volkswagen AG. Volkswagen AG does not guarantee or accept any liability with respect to the correctness of information in this document. Copyright by Volkswagen AG.

satelettronica

Switch to measuring range: Resistance measurement (2 kω)					
Test step	V.A.G 1598 sockets	Item tested	▪ Test conditions - Additional operations	Specification	Measures for deviations from specification
7	1 + 17	Resistance of rear right speed sensor (G44)	▪ Ignition switched off	1.0...1.3 kω	- Check connector T2b - Check resistance of speed sensor (1.0...1.3 kω) - Check wire to speed sensor, move wire while checking (loose contact).
8	2 + 10	Resistance of rear left speed sensor (G46)	▪ Ignition switched off	1.0...1.3 kω	- Check connector T2c - Check resistance of speed sensor (1.0...1.3 kω) - Check wire to speed sensor, move wire while checking (loose contact).

Switch to measuring range: Voltage measurement (2 V font=symbol charset=fontspecific code=64 descr='[ap]')					
Test step	V.A.G 1598 sockets	Item tested	▪ Test conditions - Additional operations	Specification	Measures for deviations from specification
9	3 + 18	Front right speed sensor (G45) voltage signal	▪ Vehicle raised ▪ Ignition switched off - Rotate front right wheel at approx. 1 rev./sec.	min. 65 mV alternating voltage	- Check installation of speed sensor and impulse wheel. - Check if speed sensor/wiring has been interchanged =>Read measured value block 26
10	4 + 11	Front left speed sensor (G47) voltage signal	▪ Vehicle raised ▪ Ignition switched off - Rotate front left wheel at approx. 1 rev./sec.	min. 65 mV alternating voltage	- Check installation of speed sensor and impulse wheel. - Check whether speed sensor has been interchanged. =>Read measured value block 26

Switch to measuring range: Voltage measurement (2 V font=symbol charset=fontspecific code=64 descr='[ap]'), Resistance measurement (200ω) in test step 13					
Test step	V.A.G 1598 sockets	Item tested	▪ Test conditions - Additional operations	Specification	Measures for deviations from specification
11	1 + 17	Rear right speed sensor (G44) voltage signal	▪ Vehicle raised		- Check installation of speed sensor and impulse wheel.

Copyright by Volkswagen AG. Volkswagen AG does not guarantee or accept any liability with respect to the correctness of information in this document. Copying for private or commercial purposes, in part or in whole, is not permitted unless authorised by Volkswagen AG. Volkswagen AG does not guarantee or accept any liability with respect to the correctness of information in this document. Copyright by Volkswagen AG.

satelettronica

Switch to measuring range: Voltage measurement (2 V font=symbol charset=fontspecific code=64 descr='[ap]'), Resistance measurement (200ω) in test step 13					
			▪ Ignition switched off - Rotate rear right wheel at approx. 1 rev./sec.	min. 190 mV alternating voltage	- Check if speed sensor/wiring has been interchanged =>Read measured value block 26
12	2 + 10	Rear left speed sensor (G46) voltage signal	▪ Vehicle raised ▪ Ignition switched off - Rotate rear left wheel at approx. 1 rev./sec.	min. 190 mV alternating voltage	- Check installation of speed sensor and impulse wheel. - Check if speed sensor/wiring has been interchanged =>Read measured value block 26
13	14 + 22	Coding bridge	▪ Ignition switched off	0.0 -1.0 ω	- Check wire and contacts in connector Replace if deviating from specifications

Switch to measuring range: Voltage measurement (20 V =) in test step 14, Resistance measurement (200ω)in test step 15					
Test step	V.A.G 1598 sockets	Item tested	▪ Test conditions - Additional operations	Specification	Measures for deviations from specification
14	-	Voltage supply for V.A.G 1551, connector T16	Connect hand multimeter V.A.G 1526 with aux. cables from adapter set V.A.G 1594 to T161)(black): contact 4 - earth contact 16 - positive	10.0 - 14.5 V	- Check wire from T16/4 to earth. Check wire from T16/16 via S21 to terminal 30.
15	-	Resistance of K-wire for self diagnosis, connector T16	▪ Ignition switched off Using adapter set V.A.G 1594 connect socket 13 of V.A.G 1598 and contact 7 of connector T16 to hand multimeter V.A.G 1526	max. 1.5 ω	- Check wire from TV 14 to contact 13. - Check wire from T16/7 via TV14 to contact 13

1) =>Page 44 , contact assignment of connectors for voltage supply and self-diagnosis with the fault reader V.A.G 1551

Functional check: ABS warning lamp (K47)					
Test step	V.A.G 1598 sockets	Item tested	▪ Test conditions - Additional operations	Specification	Measures for deviations from specification
16	-	Function of ABS warning lamp	▪ Ignition switched off		- Check wire from contact W/1 (relay plate) to earth.

Protected by copyright. Copying for private or commercial purposes, in part or in whole, is not permitted unless authorised by Volkswagen AG. Volkswagen AG does not guarantee or accept any liability with respect to the correctness of information in this document. Copyright by Volkswagen AG.
satelettronica

Functional check: ABS warning lamp (K47)					
			- Switch on ignition	Warning lamp (K47) lights up	- Check wire from contact U2/2 (relay plate) to contact T28/14 (dash panel connector). - Check wire from contact 16 to contact W/1 (relay plate).

Functional check: Twin circuit brake system and handbrake warning lamp -K7					
Test step	V.A.G 1598 sockets	Item tested	▪ Test conditions - Additional operations	Specification	Measures for deviations from specification
17	-	Function of twin circuit brake system and handbrake warning lamp	▪ Ignition switched off		- Check wire from contact U2/10 (relay plate) to earth.
			- Switch on ignition	Warning lamp (K7) lights up	- Check wire from contact U2/10 (relay plate) via K47 to contact W/1. - Check wire from contact 16 to contact W/2 (relay plate). Check wire from contact U2/10 to contact 28/18 (dash panel insert connector). - Check warning contact for brake fluid level and switch for handbrake. Check wiring from contact L/6 and E/1 (relay plate) to brake fluid level warning contact and switch for handbrake. Fault in dash panel insert.

Protected by copyright. Copying for private or commercial purposes, in part or in whole, is not permitted unless authorised by Volkswagen AG. Volkswagen AG does not guarantee or accept any liability with respect to the correctness of information in this document. Copyright by Volkswagen AG.

satelettronica

5.5 - Multi-pin connector with contact assignment - ABS, ABS/EDL ITT Mark 20 IE (from 08.97)

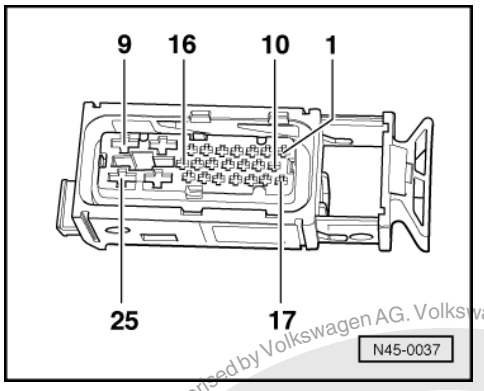

Note:

All contacts not listed are currently not assigned and must never be connected to other components!

-> Contact assignment of connector T25 wiring loom/control unit - J104

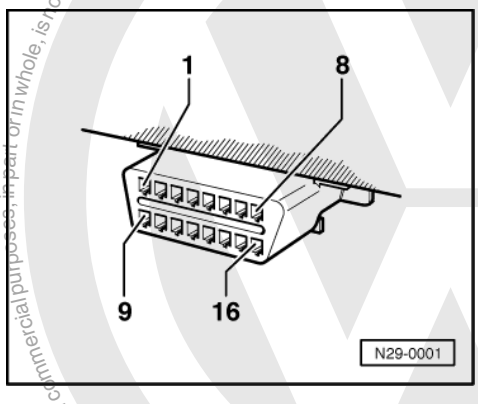

-> Contact assignment of connectors for voltage supply and self-diagnosis with the fault reader V.A.G 1551

Contact 4 = Earth (terminal 31)
Contact 16 = Positive (terminal 30) via S21
Contact 7 = K-wire via wiring junction TV 14 (above relay plate), connector T2/2 to control unit (J104) contact 13

Contact		Wiring connection to component ...
1	=>	Front left speed sensor -G47
2	=>	Front left speed sensor -G47
4	=>	Voltage supply terminal X
5	=>	Rear left speed sensor -G46
6	=>	Rear left speed sensor -G46
7	=>	Connector T16/7, K wire
8	=>	Earth terminal 31
9	=>	Battery + via S 124
13	=>	Coding bridge to contact 17
16	=>	ABS warning lamp activation
17	=>	Coding bridge to contact 13
18	=>	Brake light switch -F

Protected by copyright. Copying for private or commercial purposes, in part or in whole, is not permitted unless authorised by Volkswagen AG. Volkswagen AG does not guarantee or accept any liability with respect to the correctness of information in this document. Copyright by Volkswagen AG.

satelettronica

19	=>	Front right speed sensor -G45

Contact	Wiring connection to component ...	
20	=>	Front right speed sensor -G45
22	=>	Rear right speed sensor -G44
23	=>	Rear right speed sensor -G44
24	=>	Earth terminal 31
25	=>	Battery + via S 123

Test step overview

To test component	
Voltage supply for pump motor (terminal 30) on control unit (J104)	- Perform test step 1
Voltage supply for valves (terminal 30) on control unit (J104)	- Perform test step 2
Voltage supply (terminal X) on control unit	- Perform test step 3
Function of brake light switch -F	- Perform test step 4
Front right speed sensor -G45 resistance	- Perform test step 5
Front left speed sensor -G47 resistance	- Perform test step 6
Rear right speed sensor -G44 resistance	- Perform test step 7

To test component	
Rear left speed sensor -G46 resistance	- Perform test step 8
Front right speed sensor -G45 voltage signal	- Perform test step 9
Front left speed sensor -G47 voltage signal	- Perform test step 10
Rear right speed sensor -G44 voltage signal	- Perform test step 11
Rear left speed sensor -G46 voltage signal	- Perform test step 12
Coding bridge	- Perform test step 13
Voltage supply for V.A.G 1551, connector T16	- Perform test step 14
Resistance of K wire for self-diagnosis, connector T16	- Perform test step 15
Warning lamp function for ABS -K47	- Perform test step 16
Warning lamp function for twin circuit brake system and handbrake -K7	- Perform test step 17
Function of hydraulic pump -V64	- Perform test step 18

Protected by copyright. Copying for private or commercial purposes, in part or in whole, is not permitted unless authorised by Volkswagen AG. Volkswagen AG does not guarantee or assume any liability with respect to the correctness of information.

satelettronica

5.6 - Test table - ABS, ABS/EDL ITT Mark 20 IE (from 08.97)

Notes on test table

- The socket designations of adapter V.A.G 1598/21 are identical to the control unit (J104) contact designations in current flow diagram.

=> Current flow diagrams, Electrical fault finding and Fitting locations binder.

- If the readings obtained deviate from the specifications, carry out fault rectification measure in the right-hand part of the table.

=> Current flow diagrams, Electrical fault finding and Fitting locations binder.

- Continuity checks with adapter set V.A.G 1594 A (bridging).
- If the measured figures only deviate slightly from the specifications, clean sockets and plugs of the testers and adapter cables (with contact spray G 000 700 04) and repeat check. Before replacing components,

check wiring and connections and also, particularly for specifications of less than 10 ω, repeat resistance check on the component.

Switch to measuring range: Voltage measurement (20 V =)					
Test step	V.A.G 1598 sockets	Item tested	▪ Test conditions - Additional operations	Specification	Measures for deviations from specification
1	8 + 25	Pump motor voltage supply (terminal 30) on control unit (J104)	▪ Ignition switched off	10.0 - 14.5 V	- Check wire from contact 8 to earth. Check wire from contact 25 via fuse S123 to battery +.
2	9 + 24	Voltage supply for the valves (terminal 30) on control unit (J104)	▪ Ignition switched off	10.0 - 14.5 V	- Check wire from contact 24 to earth. Check wire from contact 9 via fuse S124 to battery +.
3	8 + 4	Voltage supply (terminal X) on control unit	▪ Ignition switched on	10.0 - 14.5 V	- Check wire from contact 8 to earth. Check wire from contact 4 to contact W/3.

Switch to measuring range: Voltage measurement (20 V =)					
Test step	V.A.G 1598 sockets	Item tested	▪ Test conditions - Additional operations	Specification	Measures for deviations from specification
4	8 + 18	Function of brake light switch (F)	▪ Ignition switched off ▪ Brake pedal not depressed	0.0 - 0.5 V	- Check fuse S20 and brake light switch (F). Check wire from contact 8 to earth.
			- Depress brake pedal	10.0 - 14.5 V	- Check wire from contact 18 to contact W/4 (relay plate).

Switch to measuring range: Resistance measurement (2 kω)					
Test step	V.A.G 1598 sockets	Item tested	▪ Test conditions - Additional operations	Specification	Measures for deviations from specification
5	19 + 20	Resistance of front right speed sensor (G45)	▪ Ignition switched off	1.0...1.3 kω	- Check connector T2d. Check resistance of speed sensor (1.0... 1.3 kω). - Check wire to speed sensor, move wire while checking (loose contact).
6	1 + 2	Resistance of front left speed sensor (G47)	▪ Ignition switched off	1.0...1.3 kω	- Check connector T2e. Check resistance of speed sensor (1.0... 1.3 kω).

Protected by copyright. Copying for private or commercial purposes, in part or whole, is not permitted unless authorised by Volkswagen AG. Volkswagen AG does not guarantee or accept any liability with respect to the correctness of information in this document. Copyright by Volkswagen AG.
satelettronica

Switch to measuring range: Resistance measurement (2 kω)					
					- Check wire to speed sensor, move wire while checking (loose contact).

Switch to measuring range: Resistance measurement (2 kω)					
Test step	V.A.G 1598 sockets	Item tested	▪ Test conditions - Additional operations	Specification	Measures for deviations from specification
7	22 + 23	Resistance of rear right speed sensor (G44)	▪ Ignition switched off	1.0...1.3 kω	- Check connector T2b. Check resistance of speed sensor (1.0... 1.3 kω). - Check wire to speed sensor, move wire while checking (loose contact).
8	6 + 5	Resistance of rear left speed sensor (G46)	▪ Ignition switched off	1.0...1.3 kω	- Check connector T2c. Check resistance of speed sensor (1.0... 1.3 kω). - Check wire to speed sensor, move wire while checking (loose contact).

Switch to measuring range: Voltage measurement (2 V font=symbol charset=fontspecific code=64 descr='[ap]')					
Test step	V.A.G 1598 sockets	Item tested	▪ Test conditions - Additional operations	Specification	Measures for deviations from specification
9	19 + 20	Front right speed sensor (G45) voltage signal	▪ Vehicle raised ▪ Ignition switched off - Rotate front right wheel at approx. 1 rev./sec.	min. 65 mV alternating voltage	- Check installation of speed sensor and rotor. - Check whether speed sensor has been interchanged. =>Read measured value block 26
10	1 + 12	Front left speed sensor (G47) voltage signal	▪ Vehicle raised ▪ Ignition switched off - Rotate front left wheel at approx. 1 rev./sec.	min. 65 mV alternating voltage	- Check installation of speed sensor and rotor. - Check whether speed sensor has been interchanged. =>Read measured value block 26

Switch to measuring range: Voltage measurement (2 V font=symbol charset=fontspecific code=64 descr='[ap]')					
Test step	V.A.G 1598 sockets	Item tested	▪ Test conditions - Additional operations	Specification	Measures for deviations from specification

Protected by copyright. Copyright by Volkswagen AG. Volkswagen AG does not guarantee or accept any liability with respect to the correctness of information in this document. Copyright by Volkswagen AG. Reproduction, in whole or in part, for private or commercial purposes, is not permitted unless authorised by Volkswagen AG.
satelettronica

Switch to measuring range: Voltage measurement (2 V font=symbol charset=fontspecific code=64 descr='[ap]')					
11	22 + 23	Rear right speed sensor (G44) voltage signal	▪ Vehicle raised ▪ Ignition switched off - Rotate rear right wheel at approx. 1 rev./sec.	min. 190 mV alternating voltage	- Check installation of speed sensor and rotor. - Check whether speed sensor has been interchanged. =>Read measured value block 26
12	6 + 5	Rear left speed sensor (G46) voltage signal	▪ Vehicle raised ▪ Ignition switched off - Rotate rear left wheel at approx. 1 rev./sec.	min. 190 mV alternating voltage	- Check installation of speed sensor and rotor. - Check whether speed sensor has been interchanged. =>Read measured value block 26

Switch to measuring range: Resistance measurement (200 ω)					
Test step	V.A.G 1598 sockets	Item tested	▪ Test conditions - Additional operations	Specification	Measures for deviations from specification
13	13 + 17	Coding bridge	▪ Ignition switched off	0.0 -1.0 ω	- Check wire and contacts in connector Replace if deviating from specifications

Switch to measuring range: Voltage measurement (20 V =) in test step 14, Resistance measurement (200ω)in test step 15					
Test step	V.A.G 1598 sockets	Item tested	▪ Test conditions - Additional operations	Specification	Measures for deviations from specification
14	-	Voltage supply for V.A.G 1551, connector T16	Connect hand multimeter V.A.G 1526 with aux. cables from adapter set V.A.G 1594 to T161): contact 4 - earth contact 16 - positive	10.0 -14.5 V	- Check wire from T16/4 to earth. Check wire from T16/16 via S21 to terminal 30.
15	-	Resistance of the K-wire for the self diagnosis, connector T16	▪ Ignition switched off Using adapter set V.A.G 1594 connect socket 7 of V.A.G 1598 and contact 7 of connector T16 to the hand multimeter V.A.G 1526	max. 1.5 ω	- Check wire from TV 14 to contact 7. Check wire from T16/7 via TV14 to contact 7

1) =>Page 49 , contact assignment of connectors for voltage supply and self-diagnosis with the fault reader V.A.G 1551

Functional check: ABS warning lamp (K47)					
Test step	V.A.G 1598 sockets	Item tested	▪ Test conditions - Additional operations	Specification	Measures for deviations from specification

Protected by copyright. Copying for private and commercial purposes, in part or in whole, is not permitted unless authorised by Volkswagen AG. Volkswagen AG does not guarantee or accept any liability with respect to the correctness of information in this document. Copyright by Volkswagen AG.

satelettronica

Functional check: ABS warning lamp (K47)					
16	-	Function of ABS warning lamp	▪ Ignition switched off - Switch on ignition	Warning lamp (K47) lights up	- Check wire from contact W/1 (relay plate) to earth. - Check wire from contact U2/2 (relay plate) to T28/14 (dash panel connector), K47 (12 V; 1.2 W) renew if necessary. - Check wire from contact 16 to contact W/1 (relay plate).

Functional check: Twin circuit brake system and handbrake warning lamp -K7					
Test step	V.A.G 1598 sockets	Item tested	▪ Test conditions - Additional operations	Specification	Measures for deviations from specification
17	-	Function of twin circuit brake system and handbrake warning lamp	▪ Ignition switched off - Switch on ignition	Warning lamp (K7) lights up	- Check wire from contact U2/10 (relay plate) to earth. - Check wire from contact U2/10 (relay plate) via K47 to contact W/1. - Check wire from contact 16 to contact W/2 (relay plate). Check wire from contact U2/10 to contact 28/18 (dash panel insert connector). - Check brake fluid level warning contact and handbrake switch. Check wire from contact L/6 and E/1 (relay plate) to brake fluid level warning contact and handbrake switch. Fault in dash panel insert.

Functional check: Hydraulic pump (V64)					
Test step	V.A.G 1598 sockets	Item tested	▪ Test conditions - Additional operations	Specification	Measures for deviations from specification
18	-	Function of ABS hydraulic pump (V64)	▪ Ignition switched off Pull hydraulic pump connector T2a off control unit		

Protected by copyright. Copying for private or commercial purposes, in part or in whole, is not permitted unless authorised by Volkswagen AG. Volkswagen AG does not guarantee or accept any liability with respect to the correctness of information in this document. Copyright by Volkswagen AG.

satelettronica

Functional check: Hydraulic pump (V64)					
			- Connect earth T2a/1 battery voltage to T2a/2 on hydraulic pump connector	Hydraulic pump runs fault free (max. 10 secs.) Hydraulic pump does not run	- Perform final control diagnosis => Page 29 . Renew control unit. - Renew hydraulic unit. => Running gear; Repair group 45; Anti-locking brake system (ABS) and anti-locking brake system with electronic differential lock (ABS/EDL) ITT Mark 20 IE; Removing and installing control unit and hydraulic unit

5.7 - Adjusting brake light switch

Remove brake light switch to adjust.

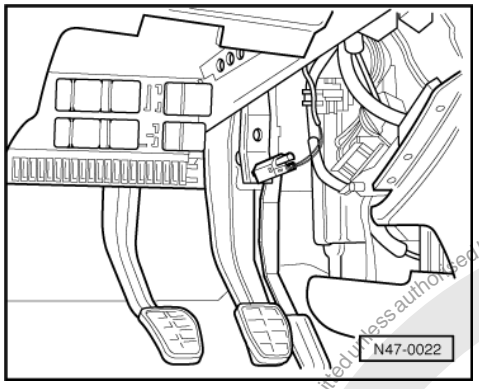

- Remove driver's side stowage compartment.
- -> Remove brake light switch by turning to right through 90°.
- Pull brake light switch plunger fully out.
- Press brake pedal down as far as possible by hand.
- Guide brake light switch through assembly opening and reinstall by turning 90°to left.
- Release brake pedal.
- Depress brake pedal onto stop.
- Operate brake pedal.

=>Both brake lights light up.

- Take foot off brake pedal.

=>Both brake lights must not light up.

Protected by copyright. Copying for private or commercial purposes, in part or in whole, is not permitted unless authorised by Volkswagen AG. Volkswagen AG does not guarantee or accept any liability with respect to the correctness of information in this document. Copyright by Volkswagen AG.

satelettronica

6 - Mark 30 IE self-diagnosis function

6.1 - Mark 30 IE self-diagnosis function

From 10.99 the following ABS system has been introduced
MARK 30 IE
This ABS system is nearly identical with the ITT Mark 20 GI. The difference is the control unit software.

6.2 - Function

As the control units are interconnected with a data bus wire, always start fault finding by interrogating fault memories of all the control units in the vehicle.
This occurs in "Automatic test sequence" and is activated with key function 00.
When doing this, check to see if there are faults stored which may influence the ABS.
The self-diagnosis relates to the electrical/electronic part of the ABS, in other words only faults via the electrical connection to the control unit are recognised (e.g. speed sensor open circuit).
The 25 pin ABS control unit -J104- forms with the hydraulic unit a compact unit. The unit is located on the left of the engine compartment. The control unit is equipped with a fault memory. The self-diagnosis connection is located in centre console below the ashtray insert.
The control unit recognises faults and malfunctions during vehicle operation and stores them in a permanent memory, the contents of which remain despite the lack of battery voltage.
Sporadic (irregular) faults will also be recognised. But if these faults do not occur again within the next 15 vehicle starts and driving off sequences for faults which affect the data bus system, or 50 vehicle starts and driving off sequences for other faults, they will be erased from fault memory except for the fault "Control unit defective" (forget fault counter).
After switching on the ignition and/or starting the engine the ABS warning lamp -K47- lights up for approx. 2 seconds.
During this period a test sequence (self-check) is run in the control unit for the following functions:

- To check if the supply voltage is at least 10.0 Volt,
- To check control unit including the valve windings,
- To check the coding of the control unit,
- A static check of the speed sensor (no speed signal),
- If after driving off and exceeding a speed of approx. 20 km/h (approx. 13 mph) the speed signal is not OK. the ABS warning lamp -K47- will light up again.

Fault reader V.A.G 1551 or tester VAS 5051
The self-diagnosis must be initiated at the commencement of fault finding. Electrical faults which influence the braking characteristics will be stored. They can be interrogated either with the fault reader V.A.G 1551 or with the tester VAS 5051.
The fault information displayed is used in conjunction with a fault table which has information on the possible fault causes for pin-pointed repair measures.

6.3 - ABS Mark 30 IE allocation

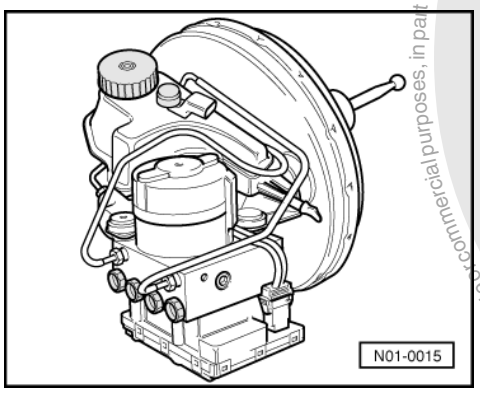

satelettronica
Protected by copyright. Copying for private or commercial purposes, in part or whole, is not permitted unless authorised by Volkswagen AG. Volkswagen AG does not guarantee or assume any liability with respect to the correctness of information in this document. Copyright by Volkswagen AG.

Left-hand drive

The brake servo boost is produced by vacuum pressure.

-> Distinguishing features:

- Brake servo 9"
- Control unit, 25-pin (bolted to hydraulic unit)

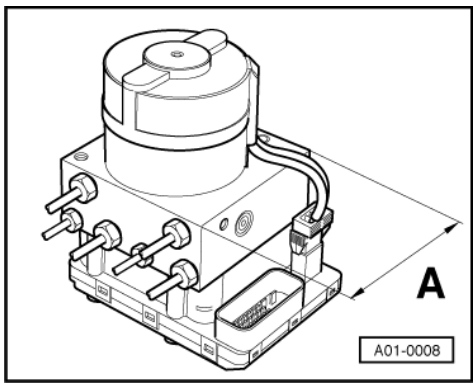

-> Distinguishing features of ABS Mark 30 IE hydraulic unit

- Dimension -A- 100 mm vehicles with ABS
- Dimension -A- 130 mm vehicles with ABS/EDL

6.4 - Technical data of self-diagnosis

Control unit identification

The version of the control unit is displayed once the fault reader V.A.G 1551 or the tester VAS 5051 has been connected and the control unit for brake electronics has been selected => Page 73 .

6X0 907 379 B ABS

6X0 907 379 C ABS / EDL

Fault memory

A non-volatile memory ensures that the contents of the fault memory are retained even without a voltage supply.

Data output takes place on fault reader V.A.G 1551 in operating mode 1 (rapid data transfer), and on tester VAS 5051 in operating mode "vehicle self-diagnosis".

6.5 - Safety precautions and fundamental points regarding fault finding

- The ABS is a vehicle safety system; the appropriate knowledge is necessary to work on the system.
- In order to check complaints and to be able to carry out pin-pointed fault finding, the fault memory must be interrogated before commencing work on the ABS system.
- Only separate connectors when the ignition is switched off.
- Observe the appropriate instructions regarding the handling of brake fluid.

=> Brake systems; Repair group 47

=> Special Information, Running gear No. 21

Protected by copyright. Copying for private or commercial purposes, in part or in whole, is not permitted unless authorised by Volkswagen AG. Volkswagen AG does not guarantee or accept any liability with respect to the correctness of information in this document. Copyright by Volkswagen AG.
satelettronica

Protected by copyright. Copying for private or commercial purposes, in part or in whole, is not permitted unless authorised by Volkswagen AG. Volkswagen AG does not guarantee or accept any liability with respect to the correctness of information in this document. Copyright by Volkswagen AG.

- ABS faults are indicated by the ABS warning lamp -K47- lighting up; certain faults will only be recognised at speeds above 20 km/h (approx. 13 mph) (carry out road test).
- If the ABS -K47- and the brake system -K118- warning lamps do not light up, but the brake system is not functioning correctly then the fault must be sought in the conventional braking system.

=> Brake systems; Repair group 45

- Information on eliminating current defects

=> Technical Service Handbook.

Necessary technical information

Current flow diagrams, Electrical fault finding and Fitting locations binder
Workshop Manual Caddy 1996 ‣, Polo Classic 1996 ‣, Polo Estate 1998 ‣ Brake systems
Workshop Manual Caddy 1996 ‣, Polo Classic 1996 ‣, Polo Estate 1998 ‣ Running gear, axles, steering
Technical service handbook

6.6 - Fault finding with fault reader V.A.G 1551 or with tester VAS 5051 on ABS Mark 30 IE (flow chart)

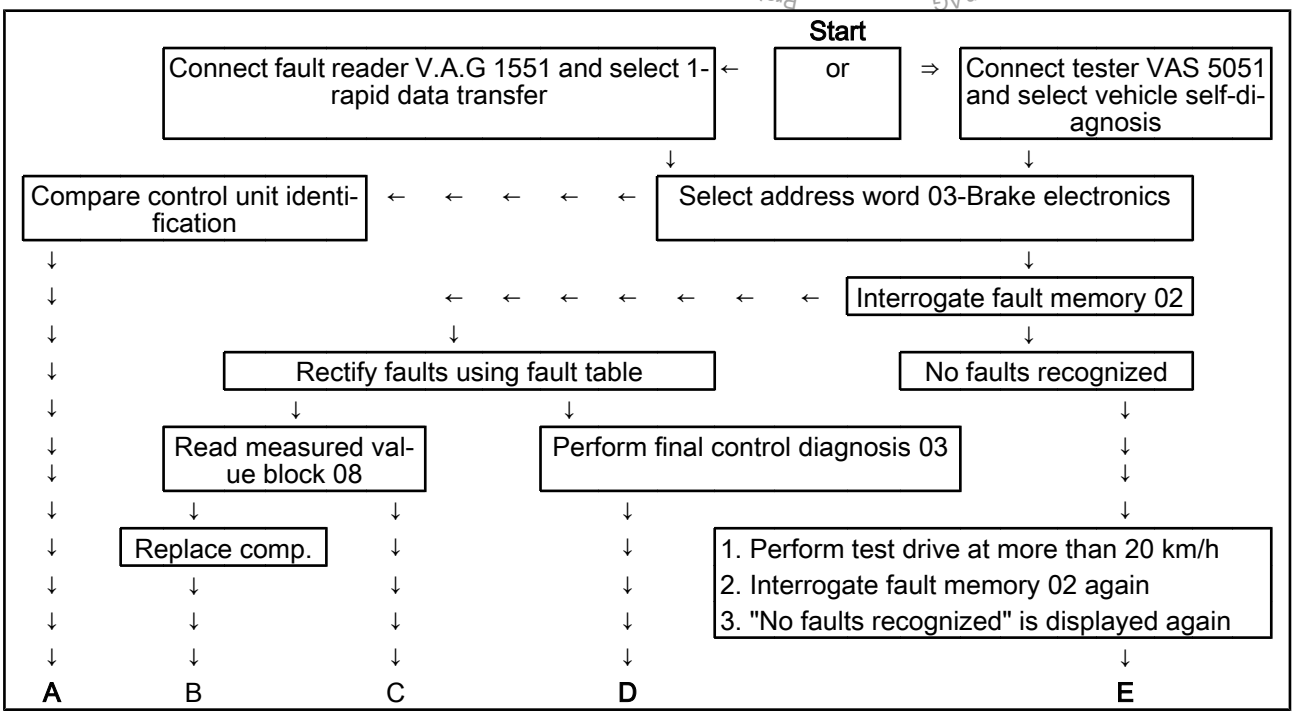

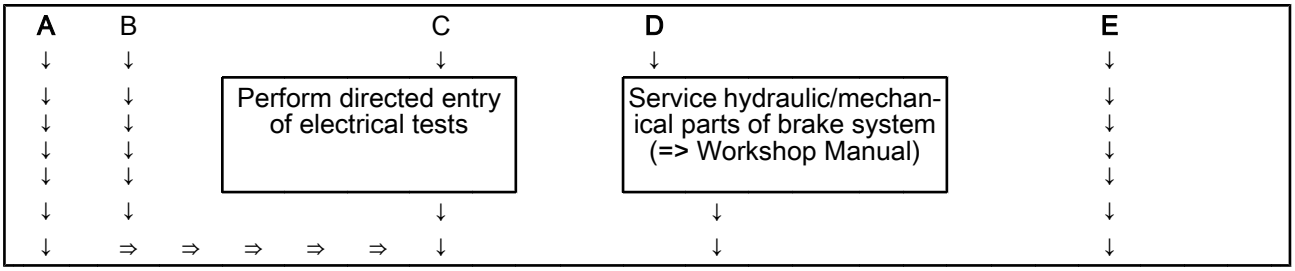

satelettronica

A B C D E

Identification not OK.

Renew control unit

1. Perform all test steps of electrical check => from Page 89
2. Service hydraulic/mechanical parts of brake system (=> Workshop Manual)

- Connect fault reader V.A.G 1551 or tester VAS 5051 and interrogate fault memory 02 again.
- Erase fault memory (05)
- Perform test drive at more than 20 km/h (13 mph) and perform a ABS regulation.
- Interrogate fault memory again after test drive. If "No fault recognized" appears on display of fault reader V.A.G 1551 or tester VAS 5051 after rectifying faults and performing test drive, the self-diagnosis is completed.

Protected by copyright. Copying for private or commercial purposes, in part or in whole, is not permitted unless authorised by Volkswagen AG. Volkswagen AG does not guarantee or accept any liability with respect to the correctness of information in this document. Copyright by Volkswagen AG.

satelettronica

7 - Electrical/electronic components and fitting locations, Caddy 10.99 >

7.1 - Electrical/electronic components and fitting locations, Caddy 10.99 >

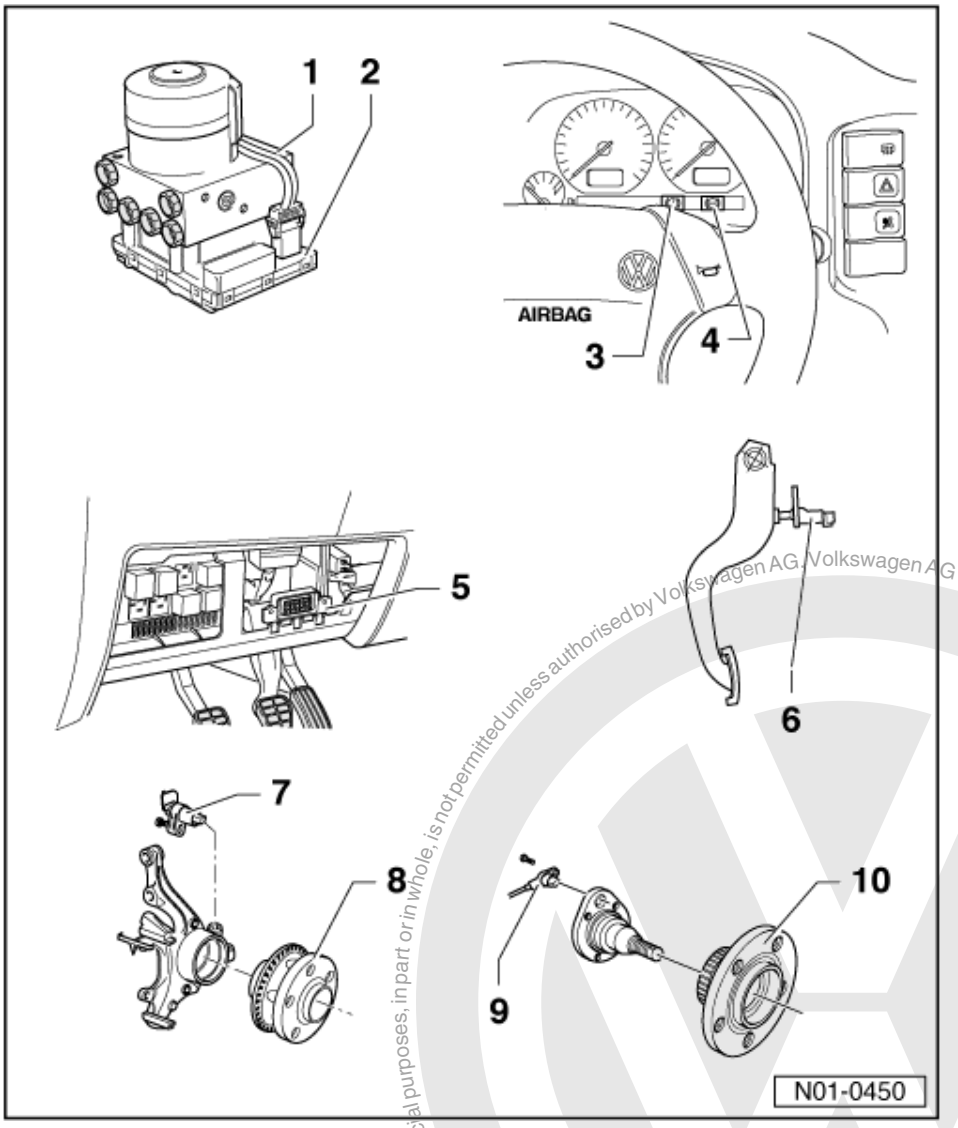

1 ABS hydraulic unit -N55

- Located on left of engine compartment.
- The hydraulic pump -V64- and the inlet/outlet valves in the hydraulic unit are checked by self-diagnosis
- The hydraulic pump -V64- and valve block must not be separated from one another
- Removing and installing

=> Brake systems; Repair group 45

- When changing the hydraulic unit, always seal the old part with the plugs from the repair set Part No. 1H0 698 311 A

Protected by copyright. Copying for private or commercial purposes, in part or in whole, is not permitted unless authorised by Volkswagen AG. Volkswagen AG does not guarantee or accept any liability with respect to the correctness of information in this document. Copyright by Volkswagen AG.
satelettronica

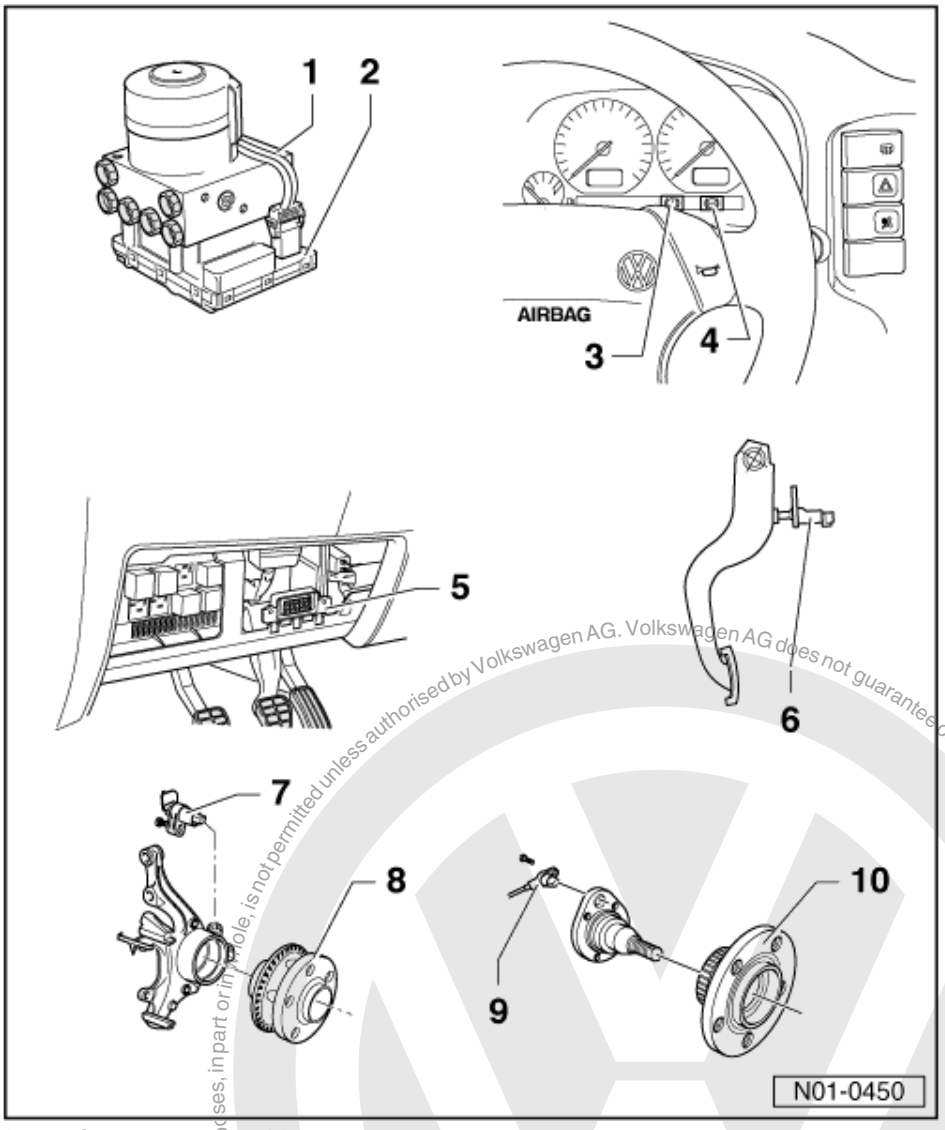

2 ABS control unit -J104
- Location: on hydraulic unit on left of engine compartment
- Checked by self-diagnosis
- Checking the multi-pin connector to control unit =>Page 91
- Do not disconnect connector before successfully completing self-diagnosis. Switch ignition off before separating connection.

3 Brake system warning lamp -K118
- Location: In the dash panel insert
  Function: =>Page 70

4 ABS warning lamp -K47
- Location: In the dash panel insert
  Function: =>Page 70

Protected by copyright. Copyright by Volkswagen AG. Copying for private and commercial purposes, in part or in whole, is not permitted unless authorised by Volkswagen AG. Volkswagen AG does not guarantee or accept any liability with respect to the correctness of information in this document.
satelettronica

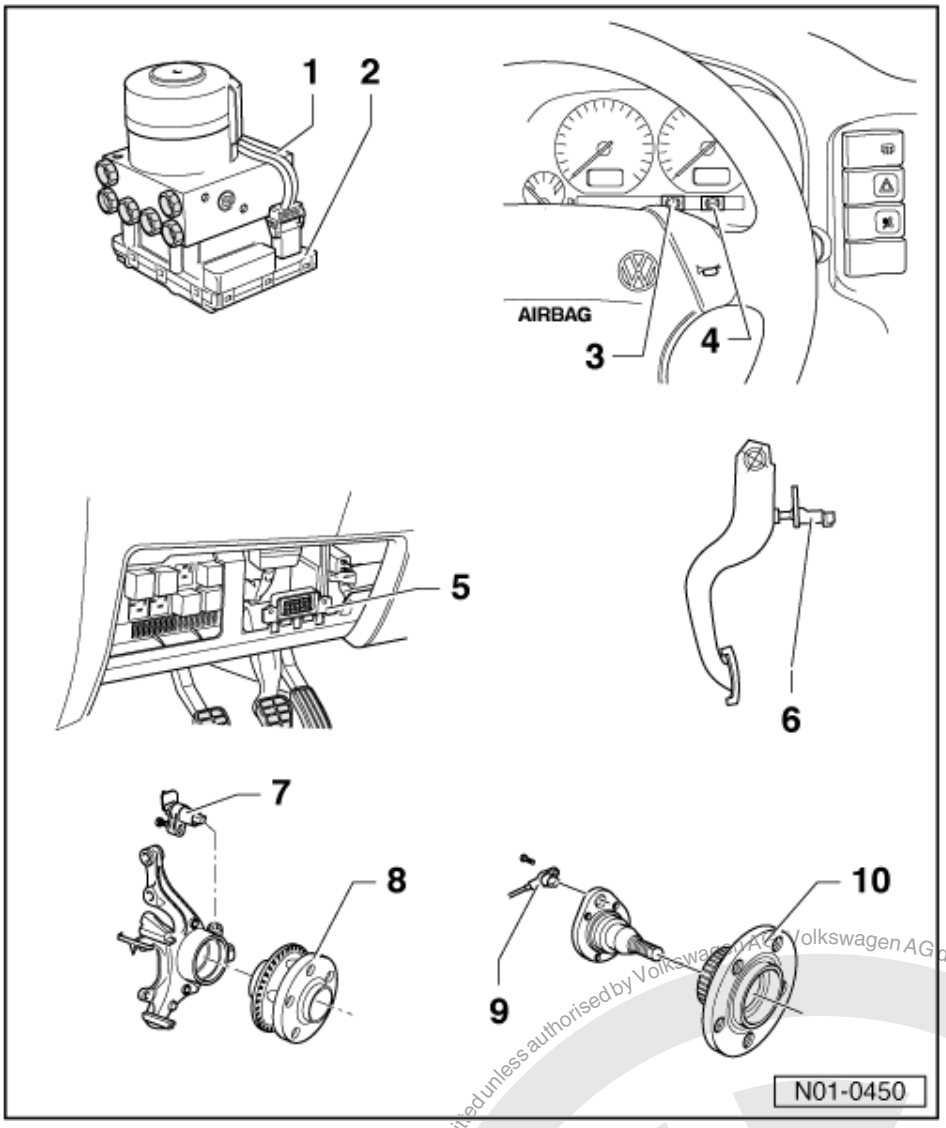

5 Diagnostic connections
- Location: Behind driver's side stowage compartment

6 Brake light switch -F
- The brake light switch is open in the rest position;
- Adjusting => Page 100
- Can be checked in measured value block => Page 84

Protected by copyright. Copying for private or commercial purposes, in part or in whole, is not permitted unless authorised by Volkswagen AG. Volkswagen AG does not guarantee or accept any liability with respect to the correctness of information in this document. Copyright by Volkswagen AG.
satelettronica

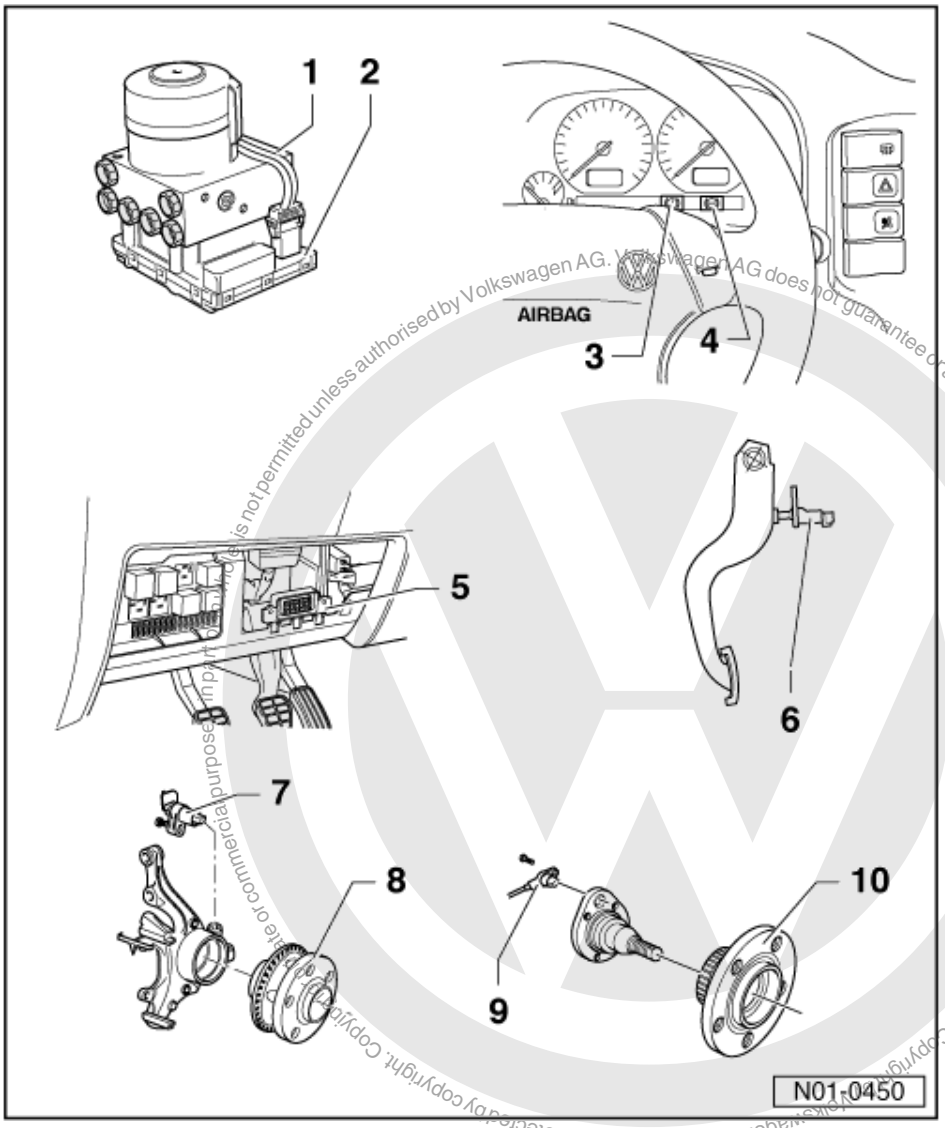

7 Front right/left speed sensor -G45-/-G47

- Checked by self-diagnosis
- Before inserting the sensor clean the inner surface of the sensor mounting and coat with lubricating paste G 000 650
- When connecting the speed sensor wire ensure it is not twisted in the wheel housing
- Bolt tightening torque 10 Nm

8 Wheel hub with rotor for speed sensors

- Wheel hub, wheel bearing with sensor ring and speed sensors for front left and right are the same as each other
- Removing and installing

=> Running gear, Axles, Steering; Repair group 40; Servicing front suspension Servicing front suspension

satelettronica

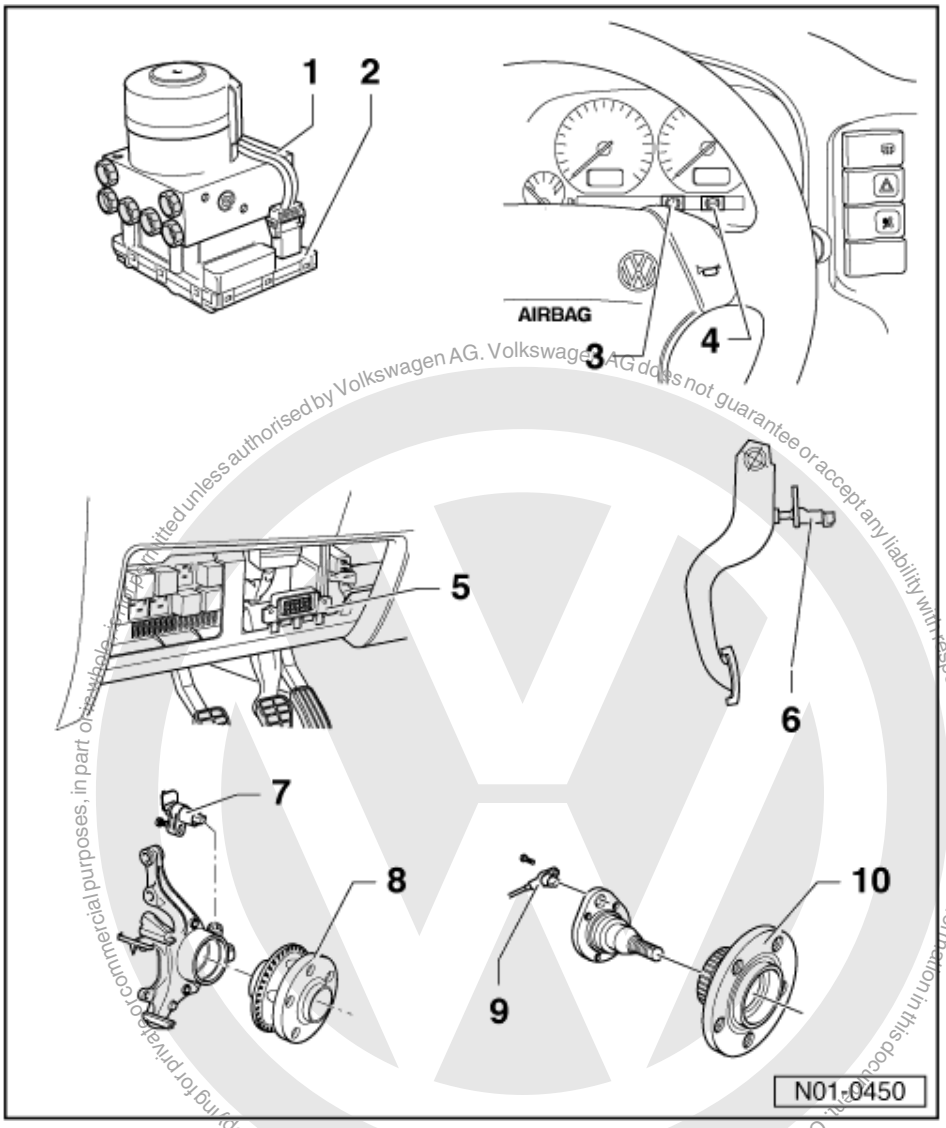

9 Rear right/left speed sensor -G44-/-G46

- Checked by self-diagnosis
- Before inserting the sensor clean the inner surface of the sensor mounting and coat with lubricating paste G 000 650
- When connecting the speed sensor wire ensure it is not twisted in the wheel housing
- Bolt tightening torque 10 Nm

10 Wheel hub with rotor for speed sensors

- Wheel hub, wheel bearing with sensor ring and speed sensors for rear left and right are the same as each other
- Removing and installing

=> Running gear, axles, steering; Repair group Gr. 42; Servicing wheel bearings

Copyright by Volkswagen AG. Protected by copyright. Only copying for private or commercial purposes, in part or in whole, is prohibited unless authorised by Volkswagen AG. Volkswagen AG does not guarantee or accept any liability with respect to the correctness of information in this document.

satelettronica

7.2 - Electrical/electronic components and fitting locations, Polo Classic, Polo Estate 10.99 >

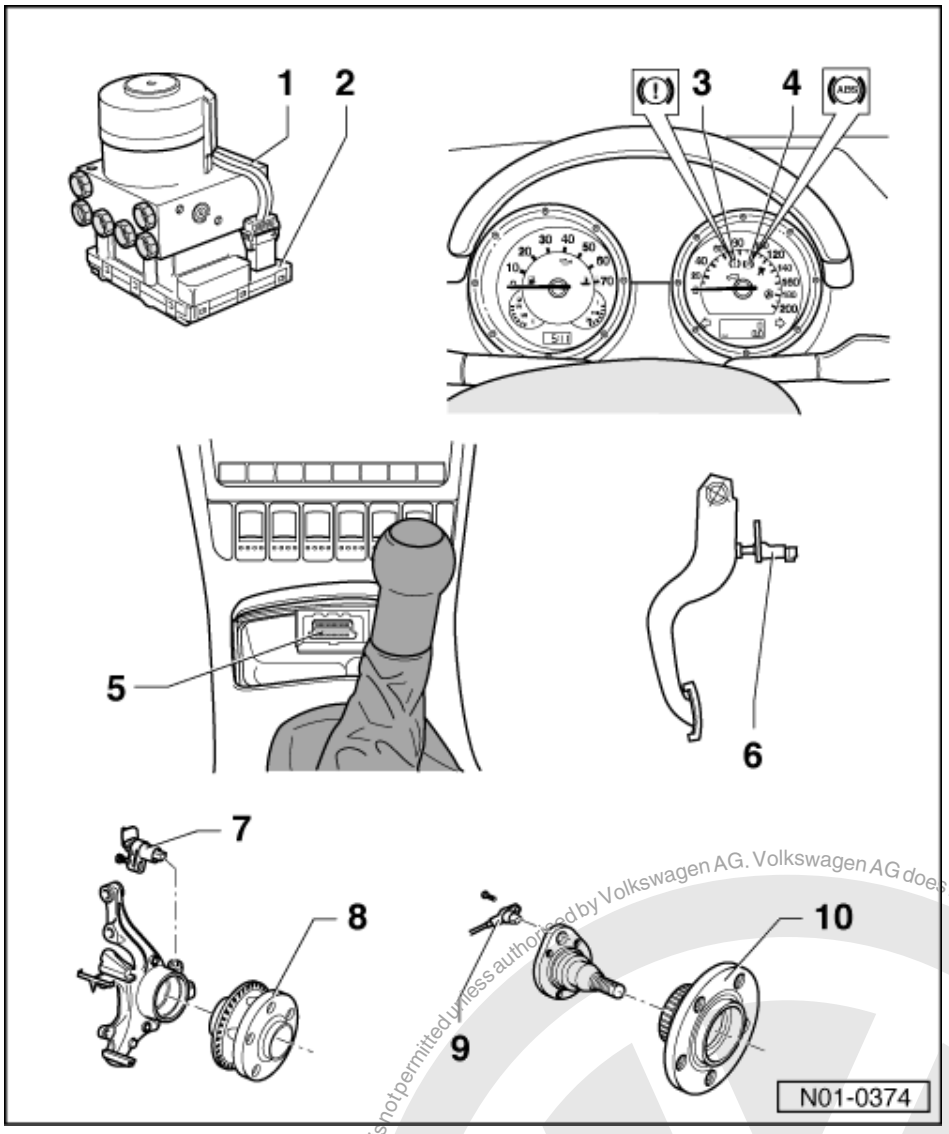

1 ABS hydraulic unit -N55

- Located on left of engine compartment.
- The hydraulic pump -V64- and the inlet/outlet valves in the hydraulic unit are checked by self-diagnosis
- The hydraulic pump -V64- and valve block must not be separated from one another
- Removing and installing

=> Brake systems; Repair group 45

- When changing the hydraulic unit, always seal the old part with the plugs from the repair set Part No. 1H0 698 311 A

Protected by copyright. Copyright for private or commercial purposes, in part or whole, is not permitted unless authorised by Volkswagen AG. Volkswagen AG does not guarantee or accept any liability with respect to the correctness of information in this document. Copyright by Volkswagen AG.
satelettronica

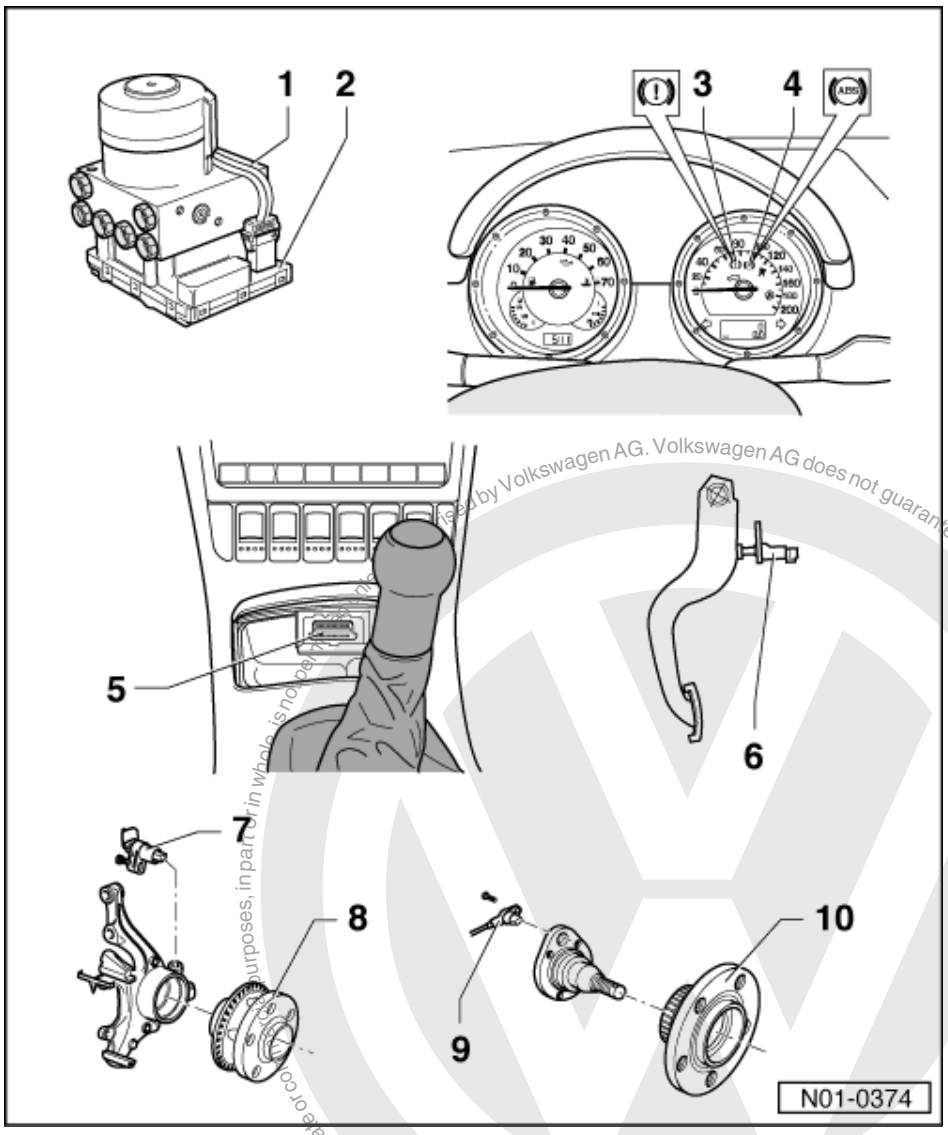

2 ABS control unit -J104

- Location: on hydraulic unit on left of engine compartment
- Checked by self-diagnosis
- Checking the multi-pin connector to control unit =>Page 91
- Do not disconnect connector before successfully completing self-diagnosis. Switch ignition off before separating connection.

3 Brake system warning lamp -K118

- Location: In the dash panel insert
  Function: =>Page 70

4 ABS warning lamp -K47

- Location: In the dash panel insert
  Function: =>Page 70

Protected by copyright. Copyright by Volkswagen AG. Volkswagen AG does not guarantee or accept any liability with respect to the correctness of information in this document. Copyright by Volkswagen AG. Protected by copyright. Copying for private or commercial purposes, in part or in whole, is not permitted unless authorised by Volkswagen AG.
satelettronica

Protected by copyright. Copying for private or commercial purposes, in part or in whole, is not permitted unless authorised by Volkswagen AG. Volkswagen AG does not guarantee or accept any liability with respect to the correctness of information in this document. Copyright by Volkswagen AG.

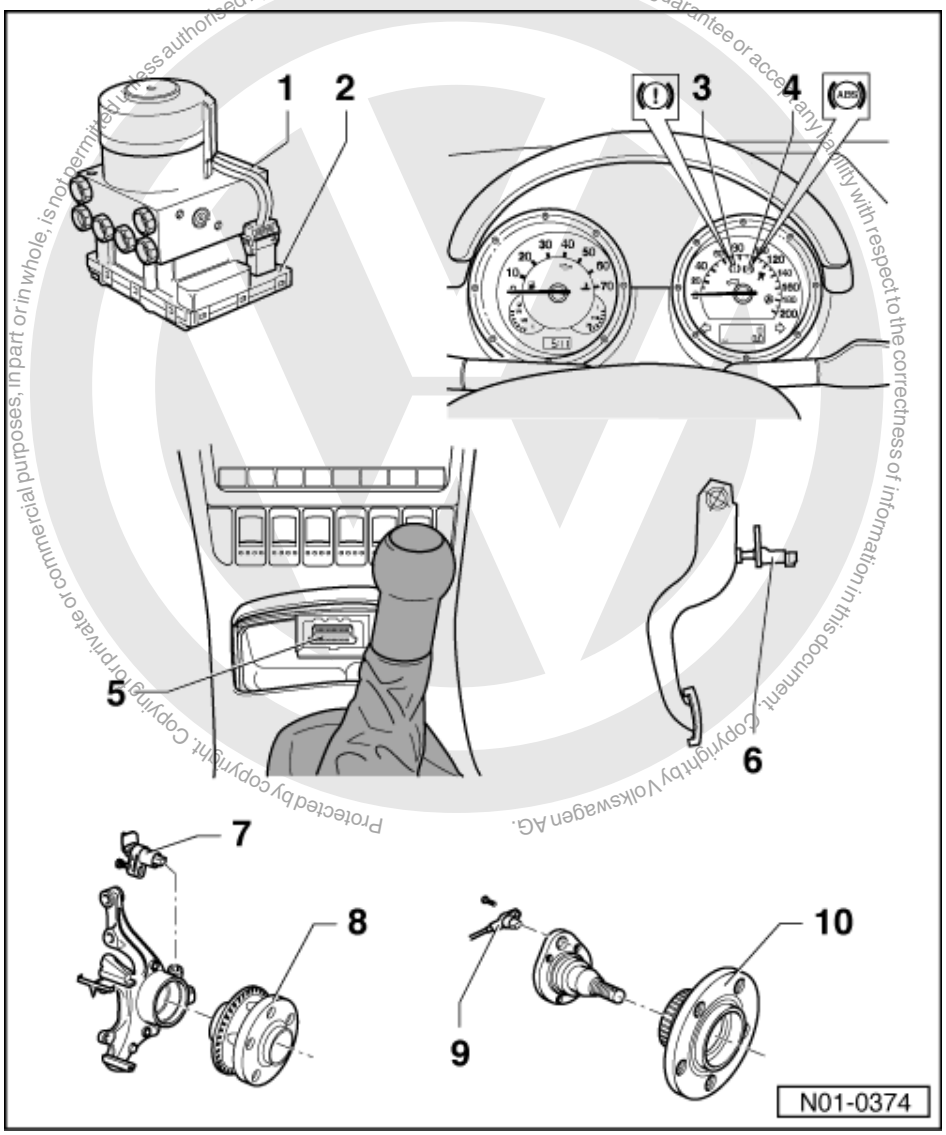

5 Diagnostic connections
- Fitting location: in centre console below ashtray

6 Brake light switch -F
- The brake light switch is open in the rest position;
- Adjusting => Page 100
- Can be checked in measured value block => Page 84

satelettronica

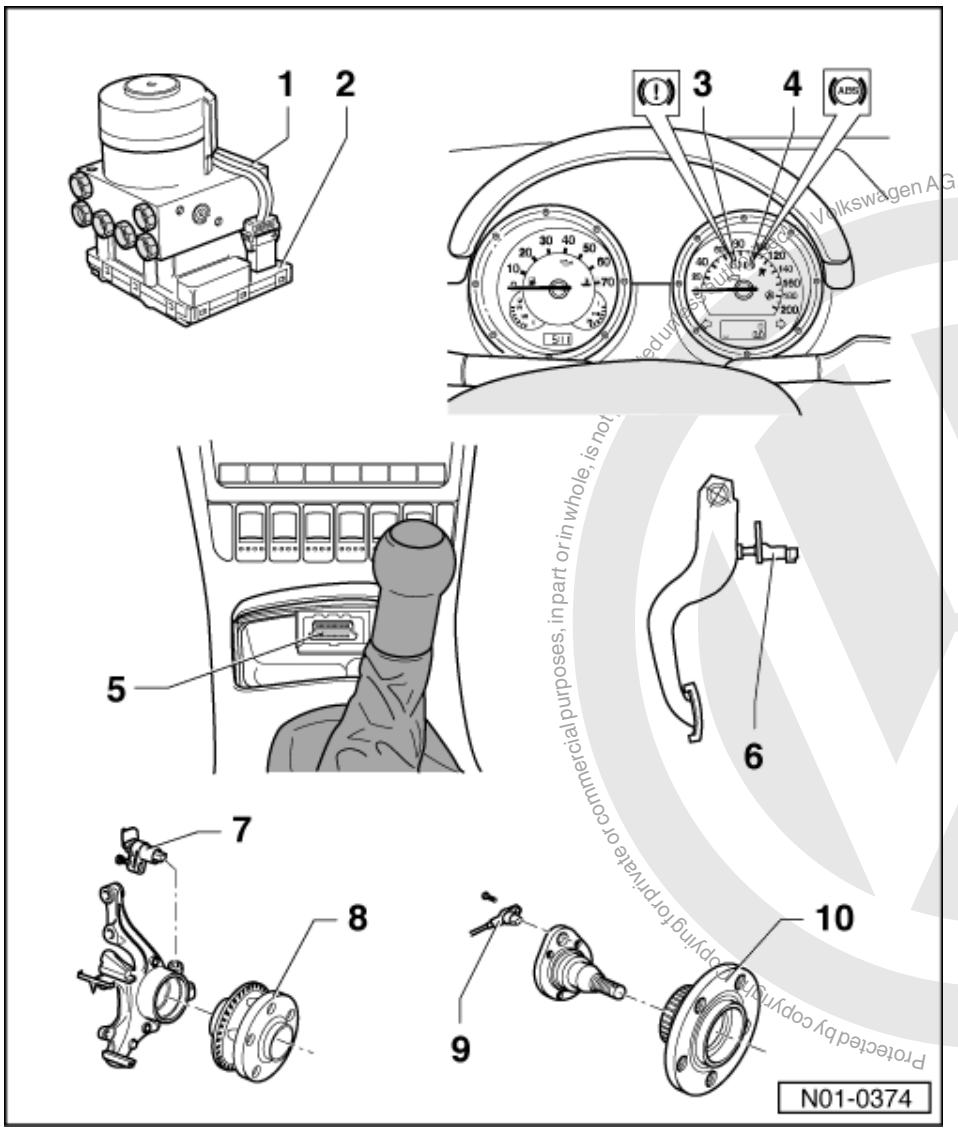

7 Front right/left speed sensor -G45-/-G47

- Checked by self-diagnosis
- Before inserting the sensor clean the inner surface of the sensor mounting and coat with lubricating paste G 000 650
- When connecting the speed sensor wire ensure it is not twisted in the wheel housing
- Bolt tightening torque 10 Nm

8 Wheel hub with rotor for speed sensors

- Wheel hub, wheel bearing with sensor ring and speed sensors for front left and right are the same as each other
- Removing and installing

=> Running gear, Axles, Steering; Repair group 40; Servicing front suspension Servicing front suspension

Protected by copyright. Copying for private or commercial purposes, in part or in whole, is not permitted unless authorised by Volkswagen AG. Volkswagen AG does not guarantee or accept any liability with respect to the correctness of information in this document. Copyright by Volkswagen AG.
satelettronica

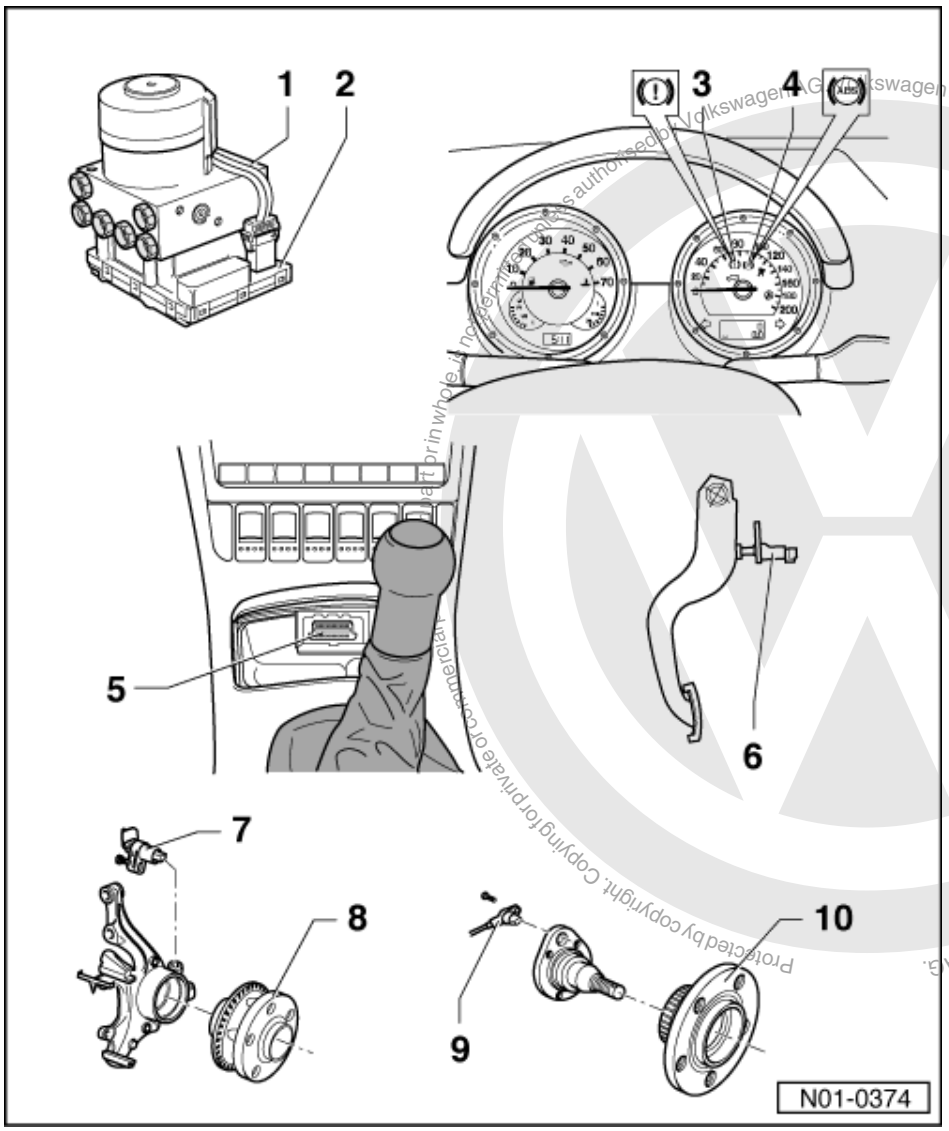

Protected by copyright. Copying for private or commercial purposes, in part or in whole, is not permitted unless authorised by Volkswagen AG. Volkswagen AG does not guarantee or accept any liability with respect to the correctness of information in this document. Copyright by Volkswagen AG.

satelettronica

9 Rear right/left speed sensor -G44-/-G46

- Checked by self-diagnosis
- Before inserting the sensor clean the inner surface of the sensor mounting and coat with lubricating paste G 000 650
- When connecting the speed sensor wire ensure it is not twisted in the wheel housing
- Bolt tightening torque 10 Nm

10 Wheel hub with rotor for speed sensors

- Wheel hub, wheel bearing with sensor ring and speed sensors for rear left and right are the same as each other
- Removing and installing

=> Running gear, axles, steering; Repair group Gr. 42; Servicing wheel bearings

8 - Faults displayed by warning lamps K47 and K118, 10.99 >

8.1 - Faults displayed by warning lamps K47 and K118, 10.99 >

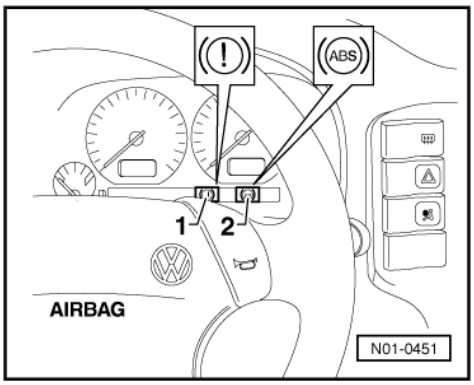

-> Warning lamps, Caddy

Item	Designation
1	Brake system warning lamp -K118
2	ABS warning lamp -K47

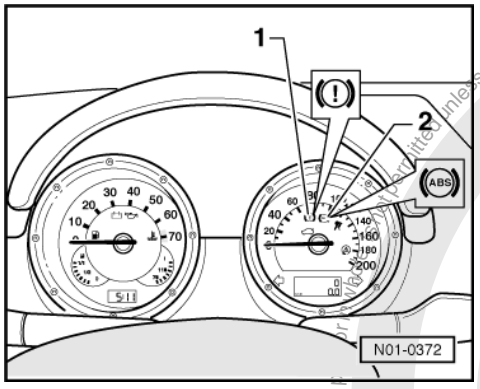

-> Warning lamps, Polo Classic, Polo Estate

Item	Designation
1	Brake system warning lamp -K118
2	ABS warning lamp -K47

Warning lamp -K47

- If the ABS warning lamp -K47- -2- does not go out after switching on ignition and completion of test sequence, then the fault may be:

  -a- Voltage supply is below 10 Volt
  -b- There is a fault in the ABS
  The anti-locking brake system remains switched off with an ABS fault -b-, but the brake system remains fully operational.
  -c- Since the last time the vehicle was started there was a temporary speed sensor fault.
  In the case of a sensor fault -c-, the ABS warning lamp -K47- will extinguish after restarting the engine and attaining a speed of above 20 km/h (approx. 13 mph).
  -d- The connection from dash panel insert to control unit -J104- is interrupted.

=> Current flow diagrams, Electrical fault finding and Fitting locations binder

Copyright by Volkswagen AG. Volkswagen AG does not guarantee or accept any liability with respect to the correctness of information in this document. Copyright by Volkswagen AG. Private or commercial use of this document is not permitted unless authorised by Volkswagen AG.
satelettronica

-e- Dash panel insert is defective.

Warning lamps -K47- and -K118

- -> If the ABS warning lamp -K47- -2- goes out, but the brake system warning lamp -K118- remains on, then the fault may be:

  -a- The handbrake is applied..
  -b- There is a fault in the activation of the brake system warning lamp -K118.

=> Current flow diagrams, Electrical fault finding and Fitting locations binder

  -c- The brake fluid level is too low.

- If the ABS warning lamp -K47- -2- and the brake system warning lamp -K118- -1- light up, the ABS system is defective and the EBD (Electronic brake pressure distribution) is not functioning.

Warning!
After the ABS warning lamp -K47- and brake system warning lamp -K118- have lit up, it is possible that the rear wheels will lock-up earlier.

9 - Performing self diagnosis 10.99 >

9.1 - Performing self diagnosis 10.99 >

9.2 - Test prerequisites for self-diagnosis

- The tyres fitted to all wheels must be of the same (approved) size; tyres inflated to prescribed pressure.
- Mechanical/hydraulic parts of the brake system including brake light switch and brake lights OK.
- Hydraulic pipes and connections not leaking (visual check of hydraulic unit, brake calipers, wheel cylinders, tandem master brake cylinder).
- Wheel bearings and wheel bearing play OK.
- Control unit -J104- is correctly bolted to hydraulic unit -N55.
- Connector on control unit -J104- correctly plugged-in (retainer is engaged).
- Check contacts of ABS components for damage and correct seating.
- All fuses according to current flow diagram OK (remove fuse from fuse holder to check).
- Supply voltage OK (at least 10.0 V).

9.3 - Safety precautions

Note!
- rYou must always secure testing and measuring equipment on the rear seat.
- rWhen vehicle is being driven, only a passenger can operate this equipment.

Copyright by Volkswagen AG. Volkswagen AG does not guarantee or accept any liability with respect to the correctness of information in this document. Copying for private or commercial purposes, in part or in whole, is not permitted unless authorised by Volkswagen AG.
satelettronica

9.4 - Connecting Vehicle Diagnosis, Testing and Information System VAS 5051 and selecting engine electronics control unit

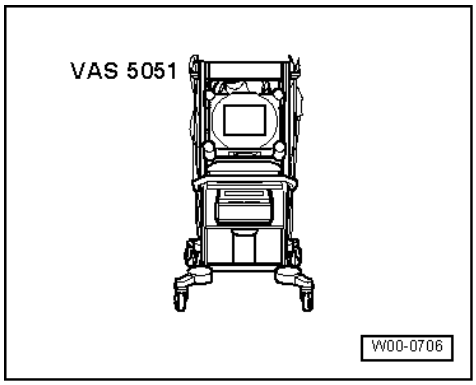

All functions which could previously be performed with V.A.G 1551 can also be performed with the new tester VAS 5051 in the operating mode "vehicle self-diagnosis":

=> Operating instructions for Vehicle Diagnosis, Testing and Information System VAS 5051.

Special tools, workshop equipment, testers, measuring instruments and auxiliary items required

- VAS 5051 Vehicle Diagnosis, Testing and Information System

- The ABS function is switched off in the control unit during the self diagnosis.
- The fault memory can be erased after successful interrogation and repair.

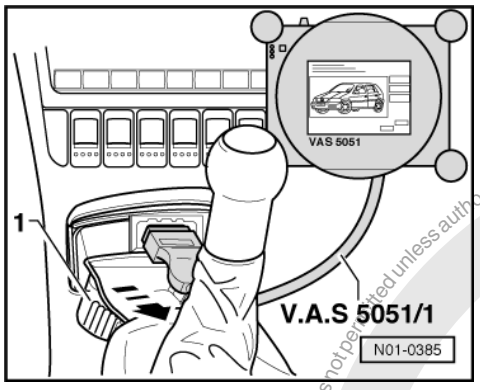

- -> Pull cover -1- off in direction of arrow.
- With ignition switched off, connect tester VAS 5051 to diagnosis connection using diagnosis cable VAS 5051/1 or VAS 5051/3.

- In the functions 04 - Basic setting/08 - Read data block, the display zones will be listed from top to bottom.
- If the display does not indicate as described in the work sequence:

=> Operating instructions for Vehicle Diagnosis, Testing and Information System VAS 5051.

Protected by copyright. Copying for private or commercial purposes, in part or in whole, is not permitted unless authorised by Volkswagen AG. Volkswagen AG does not guarantee or accept any liability with respect to the correctness of information in this document. Copyright by Volkswagen AG.

satelettronica

9.5 - Connecting fault reader V.A.G 1551 and selecting function

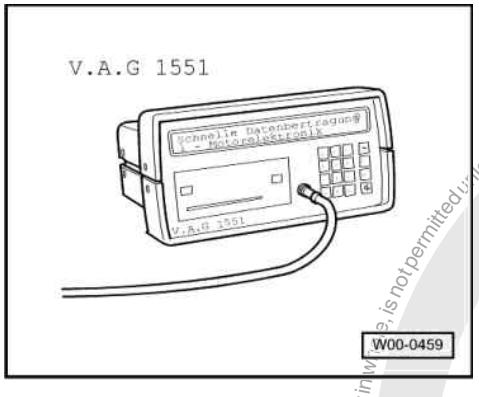

All functions which could previously be performed with V.A.G 1551 can also be performed with the new tester VAS 5051 in the operating mode "vehicle self-diagnosis":

Special tools and workshop equipment required

- V.A.G 1551 Fault reader or V.A.G 1552 vehicle system tester.

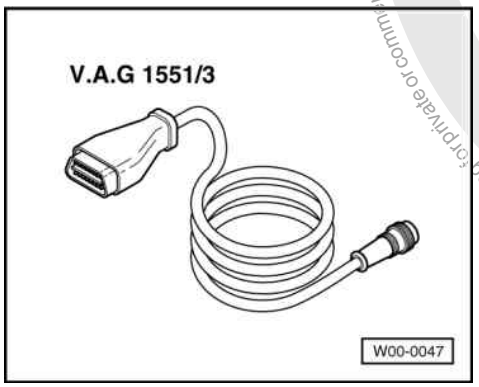

- V.A.G 1551/3 or 1551/3A Adapter cable
- The ABS function is switched off in the control unit during the self diagnosis.

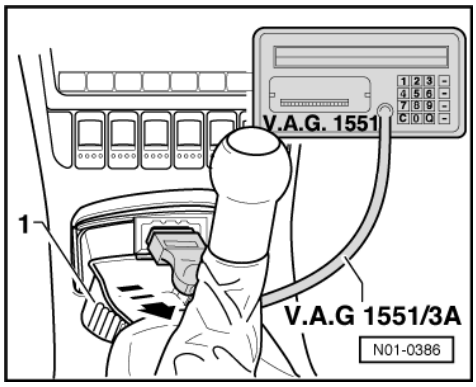

- The fault memory can be erased after successful interrogation and repair.

- -> Pull cover -1- off in direction of arrow.
- With ignition switched off connect V.A.G 1551 using cable V.A.G 1551/3(A) to diagnostic socket.
- Connecting VAS 5051 => Page 13 .

-> Indicated on display:

Protected by copyright. Copying for private or commercial purposes, in part or in whole, is not permitted unless authorised by Volkswagen AG. Volkswagen AG does not guarantee or accept any liability with respect to the correctness of information in this document. Copyright by Volkswagen AG.
satelettronica

```
V.A.G - SELF-DIAGNOSIS     HELP
1 - Rapid data transfer1)
2 - Flash code output1)
```

1) Is displayed alternately

If nothing is indicated on the display, check self-diagnosis connector, electrical test, =>Page 89 , test steps 14 and 15.

- Depending on the programme, additional operating information can be printed out by pressing the HELP key of V.A.G 1551.
- The ⇒key is used for moving forward within the programme
- The PRINT key is used for switching on the printer (warning lamp in key comes on).

- Switch on ignition.
- Switch on printer with the Print key (indicator lamp in key lights up).
- Press key -1- for "Rapid data transfer" operating mode.

-> Indicated on display:

```
Rapid data transfer      HELP
Enter address word XX
```

- Press keys -0- and -3-; 03 inputs the address word of the vehicle system to be tested "Brake electronics".

-> Indicated on display:

```
Rapid data transfer      Q
03 - Brake electronics
```

- Confirm input with Q key.

-> and subsequently indicated on display is e.g.:

```
6X0 907 379 B     ABS     30     IE
CAN     V004
Coding 06306     WSC XXXXX
```

Displayed is:

- The control unit identification number.

e.g. (6X0 907 379 B).

Allocation of control unit

=> Parts list

- System designation (ABS 30 IE)

- Data bus option (CAN).

=> Current flow diagrams, Electrical fault finding and Fitting locations binder

- Control unit coding (06306).

Coding control unit =>Page 83

- Workshop code

=> Fault reader V.A.G 1551 operating instructions

If the control unit identification number does not appear
=> Summary of selectable functions Page 75 .

- Press ⇒ key.

Protected by copyright. Copying for private or commercial purposes, in part or in whole, is not permitted unless authorised by Volkswagen AG. Volkswagen AG does not guarantee or accept any liability with respect to the correctness of information in this document. Copyright by Volkswagen AG.
satelettronica

-> Indicated on display (select function, e.g. 02 - Interrogate fault memory).

```
Rapid data transfer      HELP
Select function XX
```

-> Indicated on display:

```
Rapid data transfer      HELP
Control unit does not answer!
```

- By pressing the HELP key, a list of possible fault causes is printed out.
- After rectifying the possible causes of the fault, again enter the address word 03 for "Brake electronics" and confirm with Q key.

If "Control unit does not answer!" again appears:

-> Indicated on display:

```
Rapid data transfer      HELP
Control unit does not answer!
```

- Electrical check, => Page 89 , perform test steps 1, 2 and 3.

-> Faults have occurred during interrogation of control unit identification (possibly influenced from external sources?)

```
Rapid data transfer
No signal from control unit!
```

- Check diagnostic wire as well as voltage supply and earth connection for ABS control unit (J104), Electrical check, =>Page 89 .
- After rectifying the possible causes of the fault, again enter the address word 03 for "Brake electronics" and confirm with Q key.

9.6 - List of selectable functions

	Page
00 - Automatic test sequence	18
01 - Interrogate control unit version => Connecting tester VAS 5051 and selecting functions	72
01 - Interrogate control unit version =>Connecting fault reader V.A.G 1551 and selecting functions	73
02 - Interrogate fault memory	75
03 - Final control diagnosis	29
04 - Initiate basic setting1)	36
05 - Erase fault memory	82
06 - End output	82
07 - Code control unit	83
08 - Read measured value block	84

1) The basic setting is only necessary if at least one chamber of the brake fluid reservoir has completely run dry.

9.7 - Interrogating fault memory

- All functions that have so far been carried out with V.A.G 1551 can now also be carried out with the tester VAS 5051.

-> Indicated on display:

Protected by copyright. Copyright by Volkswagen AG. Copying for private, commercial purposes, in part or entirely, is not permitted unless authorised by Volkswagen AG. Volkswagen AG does not guarantee or accept any liability with respect to the correctness of information in this document.

satelettronica

```
Rapid data transfer      HELP
Select function XX
```

- Press keys -0- and -2-; 02 enters the "Interrogate fault memory" function.

-> Indicated on display:

```
Rapid data transfer      Q
02 - Interrogate fault memory
```

- Confirm entry with Q key.

-> The number of stored faults or "No fault recognised" appears in the display.

```
X Faults recognised!
```

- Press ⇒ key.

  The stored faults are displayed and printed out one after the other.

- With fault information print-out eliminate fault according to fault table, Page 76 .

  As with "No fault recognised", the programme returns to the start position after pressing the ⇒key:

-> Indicated on display:

```
Rapid data transfer      HELP
Select function XX
```

- End output (Function 06) => Page 82 .
- Switch off ignition and unplug diagnostic connectors.

Work sequence if a fault has been detected:

1. Rectify fault according to fault table, Page 76
2. Interrogate fault memory (Function 02)
3. Erase fault memory (Function 05)
4. End output (Function 06)
5. Perform a test drive
6. Interrogate fault memory again

9.8 - Fault table

Notes on fault table

- When commencing fault finding of the vehicle control units, always start with function "Automatic test sequence" by pressing keys 0 and 0 because the control units are interconnected with a data bus wire. This interrogates the fault memories of the control units in the vehicle.
- All the possible faults which can be recognised by the ABS control unit -J104- and printed-out on V.A.G 1551 or VAS 5051, are listed on the following pages according to the 5 digit fault code.
- Fault code appears (in the "Rapid data transfer" mode) only on the print-out.

Example:	
Fault code	Fault type code
5 digit	3 digit

satelettronica

Example:	
00283	035

- The 3 digit fault type code is a data code and may be disregarded, but the fault type text is of use.
- Before replacing components indicated as being faulty, check all the appropriate connectors, wiring and earth connections using the current flow diagram =>Current flow diagrams, Electrical fault finding and Fitting locations binder.
- On completion of repairs always interrogate the fault memory with fault reader V.A.G 1551 or the new tester VAS 5051 and erase.
- Carry out road test exceeding 20 km/h (13 mph).
- After the road test interrogate fault memory again.

V.A.G 1551 print-out	Possible cause of fault	Rectifying fault
No fault recognised	If "No fault recognised" appears after carrying out repairs, self diagnosis is ended. If, despite "No fault recognised" appearing in the display, the ABS system does not function properly, then proceed as follows: 1. Carry out road test exceeding 20 km/h (13 mph), 2. Again interrogate fault memory, if there is still no fault stored, 3. Continue fault finding without self-diagnosis and work through the complete Electrical check => Page 89 .	

V.A.G 1551 print-out	Possible cause of fault	Rectifying fault
00283 Front left speed sensor -G47	- Open circuit, short to positive or earth, or loose contact in connections between speed sensor -G47- and control unit -J104	- Check wiring and connections using current flow diagram Perform electrical checks =>from Page 89
	- Damaged rotor or speed sensor -G47 - Speed sensor windings -G47- defective	- Check speed sensor -G47- and rotor for damage Renew rotor/speed sensor -G47 => Brake systems; Repair group 45; Removing and installing parts of ABS system on front and rear axles Removing and installing parts of ABS system on front and rear axles
	- ABS control unit -J104- defective	If the fault occurs again: - Renew control unit -J104 => Brake systems; Repair group 45

V.A.G 1551 print-out	Possible cause of fault	Rectifying fault
00283 Front left speed sensor -G47 Signal outside tolerances1)	- Open circuit, short to positive or earth, or loose contact in connections between speed sensor -G47 and control unit -J104	- Check wiring and connections using current flow diagram Perform electrical checks =>from Page 89
	- Electrical interference from other sources (high frequency radiation e.g. non-insulated ignition cable)	- Read measured value block =>Page 84 Display group number 001
	- Damaged rotor or speed sensor -G47 - Excessive air gap between speed sensor -G47- and rotor (signal not OK.)	- Check speed sensor -G47- and rotor for damage Renew rotor/speed sensor => Brake systems; Repair group 45; Removing and installing parts of ABS system on front and rear axles Removing and installing parts of ABS system on front and rear axles

1) Type of fault, this fault is only recognised above 20 km/h (13 mph) (carry out test drive).

satelettronica

V.A.G 1551 print-out	Possible cause of fault	Rectifying fault
00283 Front left speed sensor -G47 Mechanical fault1)	- Excessive air gap between speed sensor -G47- and rotor (signal not OK.) - Outlet valve in hydraulic unit -N55- defective	- Check installation of speed sensor -G47- and rotor => Brake systems; Repair group 45; Removing and installing parts of ABS system on front and rear axles 29 If the fault occurs again: - Renew hydraulic unit -N55 => Brake systems; Repair group 45

1) Type of fault, this fault is only recognised above 20 km/h (13 mph) (carry out test drive).

V.A.G 1551 print-out	Possible cause of fault	Rectifying fault
00285 Front right speed sensor -G45	- Open circuit, short to positive or earth, or loose contact in connections between speed sensor -G45- and control unit -J104 - Damaged rotor or speed sensor -G45 - Speed sensor windings -G45- defective - ABS control unit -J104- defective	- Check wiring and connections using current flow diagram Perform electrical checks =>from Page 89 - Check speed sensor -G45- and rotor for damage Renew rotor/speed sensor -G45 => Brake systems; Repair group 45; Removing and installing parts of ABS system on front and rear axles Removing and installing parts of ABS system on front and rear axles If the fault occurs again: - Renew control unit -J104 => Brake systems; Repair group 45

V.A.G 1551 print-out	Possible cause of fault	Rectifying fault
00285 Front right speed sensor -G45 Signal outside tolerances1)	- Open circuit, short to positive or earth, or loose contact in connections between speed sensor -G45- and control unit -J104 - Electrical interference from other sources (high frequency radiation e.g. non-insulated ignition cable) - Damaged rotor or speed sensor -G45 - Excessive air gap between speed sensor -G45- and rotor (signal not OK.)	- Check wiring and connections using current flow diagram Perform electrical checks =>from Page 89 - Read measured value block =>Page 84 Display group number 001 - Check speed sensor -G45- and rotor for damage Renew rotor/speed sensor => Brake systems; Repair group 45; Removing and installing parts of ABS system on front and rear axles Removing and installing parts of ABS system on front and rear axles

1) Type of fault, this fault is only recognised above 20 km/h (13 mph) (carry out test drive).

V.A.G 1551 print-out	Possible cause of fault	Rectifying fault
00285 Front right speed sensor -G45 Mechanical fault1)	- Excessive air gap between speed sensor -G45- and rotor (signal not OK.)	- Check installation of speed sensor -G45- and rotor => Brake systems; Repair group 45; Removing and installing parts of ABS system on front and rear axles 29

satelettronica

V.A.G 1551 print-out	Possible cause of fault	Rectifying fault
	- Outlet valve in hydraulic unit -N55- defective	If the fault occurs again: - Renew hydraulic unit -N55 => Brake systems; Repair group 45

1) Type of fault, this fault is only recognised above 20 km/h (13 mph) (carry out test drive).

V.A.G 1551 print-out	Possible cause of fault	Rectifying fault
00287 Rear right speed sensor -G44	- Open circuit, short to positive or earth, or loose contact in connections between speed sensor -G44- and control unit -J104 - Damaged rotor or speed sensor -G44 - Speed sensor windings -G44- defective - ABS control unit -J104- defective	- Check wiring and connections using current flow diagram Perform electrical checks =>from Page 89 - Check speed sensor -G44- and rotor for damage Renew rotor/speed sensor -G44 => Brake systems; Repair group 45; Removing and installing parts of ABS system on front and rear axles Removing and installing parts of ABS system on front and rear axles If the fault occurs again: - Renew control unit -J104 => Brake systems; Repair group 45

V.A.G 1551 print-out	Possible cause of fault	Rectifying fault
00287 Rear right speed sensor -G44 Signal outside tolerances1)	- Open circuit, short to positive or earth, or loose contact in connections between speed sensor -G44- and control unit -J104 - Electrical interference from other sources (high frequency radiation e.g. non-insulated ignition cable) - Damaged rotor or speed sensor -G44 - Excessive air gap between speed sensor -G44- and rotor (signal not OK.)	- Check wiring and connections using current flow diagram Perform electrical checks =>from page 89 - Read measured value block =>Page 84 Display group number 001 - Check speed sensor -G44- and rotor for damage Renew rotor/speed sensor => Brake systems; Repair group 45; Removing and installing parts of ABS system on front and rear axles Removing and installing parts of ABS system on front and rear axles

1) Type of fault, this fault is only recognised above 20 km/h (13 mph) (carry out test drive).

V.A.G 1551 print-out	Possible cause of fault	Rectifying fault
00287 Rear right speed sensor -G44 Mechanical fault1)	- Excessive air gap between speed sensor -G44- and rotor (signal not OK.) - Outlet valve in hydraulic unit -N55- defective	- Check installation of speed sensor -G44- and rotor => Brake systems; Repair group 45; Removing and installing parts of ABS system on front and rear axles 29 If the fault occurs again: - Renew hydraulic unit -N55

Protected by copyright. Copying for private or commercial purposes, in part or in whole, is not permitted unless authorised by Volkswagen AG. Volkswagen AG does not guarantee or accept any liability with respect to the correctness of information in this document. Copyright by Volkswagen AG.
satelettronica

V.A.G 1551 print-out	Possible cause of fault	Rectifying fault
		=> Brake systems; Repair group 45

1) Type of fault, this fault is only recognised above 20 km/h (13 mph) (carry out test drive).

V.A.G 1551 print-out	Possible cause of fault	Rectifying fault
00290 Rear left speed sensor -G46	- Open circuit, short to positive or earth, or loose contact in connections between speed sensor -G46- and control unit -J104 - Speed sensor windings -G46- defective - Damaged rotor or speed sensor -G46 - ABS control unit -J104- defective	- Check wiring and connections using current flow diagram Perform electrical checks =>from Page 89 - Check speed sensor -G46- and rotor for damage Renew rotor/speed sensor -G46 => Brake systems; Repair group 45; Removing and installing parts of ABS system on front and rear axles Removing and installing parts of ABS system on front and rear axles If the fault occurs again: - Renew control unit -J104 => Brake systems; Repair group 45

V.A.G 1551 print-out	Possible cause of fault	Rectifying fault
00290 Rear left speed sensor -G46 Signal outside tolerances1)	- Open circuit, short to positive or earth, or loose contact in connections between speed sensor -G46- and control unit -J104 - Electrical interference from other sources (high frequency radiation e.g. non-insulated ignition cable) - Damaged rotor or speed sensor -G46 - Excessive air gap between speed sensor -G46- and rotor (signal not OK.)	- Check wiring and connections using current flow diagram Perform electrical checks =>from Page 89 - Read measured value block =>Page 84 Display group number 001 - Check speed sensor -G46- and rotor for damage Renew rotor/speed sensor => Brake systems; Repair group 45; Removing and installing parts of ABS system on front and rear axles Removing and installing parts of ABS system on front and rear axles

1) Type of fault, this fault is only recognised above 20 km/h (13 mph) (carry out test drive).

V.A.G 1551 print-out	Possible cause of fault	Rectifying fault
00290 Rear left speed sensor -G46 Mechanical fault1)	- Excessive air gap between speed sensor -G46- and rotor (signal not OK.) - Outlet valve in hydraulic unit -N55- defective	- Check installation of speed sensor -G46- and rotor => Brake systems; Repair group 45; Removing and installing parts of ABS system on front and rear axles 29 If the fault occurs again: - Renew hydraulic unit -N55 => Brake systems; Repair group 45

1) Type of fault, this fault is only recognised above 20 km/h (13 mph) (carry out test drive).

Copyright by Volkswagen AG. Volkswagen AG does not warrant or accept any liability with respect to the correctness of information in this document. Copyright by Volkswagen AG. Protected by copyright. Copying for private or commercial purposes, in part or in whole, is not permitted unless authorised by Volkswagen AG.
satelettronica

V.A.G 1551 print-out	Possible cause of fault	Rectifying fault
00668 Vehicle voltage terminal 30 Signal outside tolerances	- Open circuit, short to positive or earth in the wiring - Discharge battery	- Check wiring and connections using current flow diagram - Perform electrical check =>from Page 89
01044 Control unit incorrectly coded	- Control unit -J104- incorrectly coded - Coding bridge in multi-pin connector to control unit -J104- open or short circuit	- Check coding for control unit -J104- =>Page 83 - Check wiring and connections using current flow diagram - Perform electrical check =>from Page 89

V.A.G 1551 print-out	Possible cause of fault	Rectifying fault
01130 ABS operation Implausible signal1)	- Electrical interference from other sources (high frequency radiation e.g. non-insulated ignition cable) - Open circuit, short to positive or earth in the wiring - ABS control unit -J104- defective	- Erase fault memory Perform test drive at more than 20 km/h (13 mph) Interrogate fault memory again - Check wiring and connections using current flow diagram - Perform electrical check =>from Page 89 If the fault occurs again: - Renew control unit -J104 => Brake systems; Repair group 45

1) Type of fault, this fault is only recognised above 20 km/h (13 mph) (carry out test drive).

V.A.G 1551 print-out	Possible cause of fault	Rectifying fault
01276 ABS hydraulic pump -V64 Signal outside tolerances1)	- Hydraulic pump connector -V64- to ABS control unit -J104 - Open circuit, short to positive or earth in the wiring - Hydraulic pump -V64- defective - ABS control unit -J104- defective	- Perform final control diagnosis => Page 29 - Check wiring and connections using current flow diagram - Perform electrical check =>from Page 89 - If hydraulic pump -V64- runs fault-free when test step No. 17 of the electrical check is performed => Page 89 , the control unit -J104- must be renewed. - Renew control unit -J104 => Brake systems; Repair group 45

1) Type of fault, this fault is only recognised above 20 km/h (13 mph) (carry out test drive).

V.A.G 1551 print-out	Possible cause of fault	Rectifying fault
01312 Drive train data bus defective1) or:	- ABS control unit -J104- incorrectly coded - Engine control unit incorrectly coded - Open circuit, short to positive or earth in data bus wiring	- Check control unit coding -J104- =>Page 83 Check engine control unit coding => Repair group 01 of corresponding engine code - Check wiring and connections of data bus wiring using current flow diagram

satelettronica

V.A.G 1551 print-out	Possible cause of fault	Rectifying fault
		- Perform electrical check =>from Page 89

1) The fault message "drive train data bus defective" does not lead to the switching on of the ABS warning lamp -K47-. The ABS remains fully functional.

V.A.G 1551 print-out	Possible cause of fault	Rectifying fault
01314 Engine control unit No communication		- Read measured value block =>Page 84 Display group number 125
	- Open circuit, short to positive or earth in data bus wiring	- Check wiring and connections of data bus wiring using current flow diagram
or:		- Perform electrical check =>from Page 89
Interrogate engine control unit memory	- Fault entry in engine control unit	- Interrogate engine control unit fault memory => Repair group 01 for relevant engine codes

V.A.G 1551 print-out	Possible cause of fault	Rectifying fault
01315 Gearbox control unit1) No communication		- Read measured value block =>Page 84 Display group number 125
	- Open circuit, short to positive or earth in data bus wiring	- Check wiring and connections of data bus wiring using current flow diagram - Perform electrical check =>from Page 89
65535 Control unit defective	ABS control unit -J104- defective	- Renew control unit -J104 => Brake systems; Repair group 45; Hydraulic unit, brake servo/brake master cylinder - Assembly overview; Removing and installing control unit and hydraulic unit Hydraulic unit, brake servo/brake master cylinder - Assembly overview; Removing and installing control unit and hydraulic unit

1) Vehicles with automatic gearbox only.

9.9 - Erasing fault memory, ending output

- All functions that have so far been carried out with V.A.G 1551 can now also be carried out with the tester VAS 5051.

Prerequisites:

- Fault memory interrogated => Page 75

1. Erasing fault memory

- Press ⇒ key.

-> Indicated on display:

Protected by copyright. Copying for private or commercial purposes, in part or in whole, is not permitted unless authorised by Volkswagen AG. Volkswagen AG does not guarantee or accept any liability with respect to the correctness of information in this document. Copyright by Volkswagen AG.
satelettronica

```
Rapid data transfer      HELP
Select function XX
```

- Press keys 0 and 5; 05 enters the "Erase fault memory" function.

-> Indicated on display:

```
Rapid data transfer      Q
05 Erase fault memory
```

- Confirm entry with Q key

-> Indicated on display:

```
Rapid data transfer
Fault memory is erased!
```

- Press ⇒ key.

-> Indicated on display:

```
Rapid data transfer      HELP
Select function XX
```

-> Indicated on display:

```
Warning!
Fault memory was not interrogated.
```

- Adhere exactly to test sequence: First interrogate fault memory, then erase

2. Ending output

- Press keys 0 and 6, this ends the output.

-> Indicated on display

```
Rapid data transfer      Q
06 - End output
```

- Confirm input with Q key.

-> Indicated on display:

```
Rapid data transfer      HELP
Select function XX
```

- Switch off ignition.
- Disconnect connection to fault reader V.A.G 1551
- Switch on ignition.

ABS warning lamp -K47- must go out after approx. 2 seconds.

9.10 - Coding control unit

- All functions that have so far been carried out with V.A.G 1551 can now also be carried out with the tester VAS 5051.
- Warning lamps for ABS -K47- and for brake system -K118- flash when control unit is coded with 00000. An entry is not set in the fault memory.
- The control unit -J104- must be recoded if the vehicle relevant coding is not displayed or the control unit has been renewed.

Coding is only possible after the workshop code (WSC) has been entered into V.A.G 1551.

Protected by copyright. Copying for private or commercial purposes, in part or in whole, is not permitted unless authorised by Volkswagen AG. Volkswagen AG does not guarantee or accept any liability with respect to the correctness of information in this document. Copyright by Volkswagen AG.
satelettronica

Protected by copyright. Copying for private or commercial purposes, in part or in whole, is not permitted unless authorised by Volkswagen AG. Volkswagen AG does not guarantee or accept any liability with respect to the correctness of information in this document. Copyright by Volkswagen AG.

satelettronica

Test sequence

- Connect fault reader V.A.G 1551 and select (address word 03) "Brake electronics control unit" with ignition switched on; => Page 73 .

-> Indicated on display:

```
Rapid data transfer      HELP
Select function XX
```

- Input 07 for the function "Code control unit" and confirm with Q.

-> Indicated on display:

```
Rapid data transfer      Q
07 - Code control unit
```

- Confirm input with Q key.

-> Indicated on display:

```
Coding control unit      Q
Enter code number XXXXX      (0-32000)
```

- Enter the relevant code number for this vehicle and confirm with Q key.

  Coding variations => Page 84 .

-> On the display the control unit identification and coding are displayed, e.g.:

```
6X0 907 379 B      ABS      30      IE
CAN      V004
Coding 06306      WSC XXXXX
```

Code table for ABS, ABS/EDL system 30 IE

Model	Engine	Estate	Control unit	Coding
Caddy	up to 66 KW	ABS	6X0 907 379 B	06416
		ABS/EDL	6X0 907 379 C	06416
Caddy	from 66 KW	ABS	6X0 907 379 B	06416
		ABS/EDL	6X0 907 379 C	16416
Polo Classic Polo Estate	up to 66 KW	ABS	6X0 907 379 B	06306
		ABS/EDL	6X0 907 379 C	06306
Polo Classic Polo Estate	from 66 KW	ABS	6X0 907 379 B	06306
		ABS/EDL	6X0 907 379 C	16306

9.11 - Read measured value block

- All functions that have so far been carried out with V.A.G 1551 can now also be carried out with the tester VAS 5051.

The control unit can transfer a considerable amount of test data. This test data delivers information on the operational condition of the system and/or sensors connected to it. In many cases the transferred test data

supports fault finding and fault rectification. The test data has been summarized into single display groups because all the information cannot be evaluated at the same time. The information can be selected via display group numbers.

Observe following if test and measuring instruments are required during a test drive:

- Test and measuring instruments must be secured to rear seat and operated by a 2nd person from this location.
- When test and measuring instruments are operated from the front passenger seat there is a danger that the person sitting there could be injured in an accident when the airbag is triggered.

- Connect fault reader V.A.G 1551 and select (address word 03) "Brake electronics control unit" with ignition switched on; => Page 73 .

-> Indicated on display:

```
Rapid data transfer       HELP
Select function XX
```

- Press keys 0 and 8. (The function "Read measured value block" is initiated with 08.)

-> Indicated on display:

```
Rapid data transfer       Q
08 - Read measured value block
```

- Confirm entry with key Q.

-> Indicated on display:

```
Read measured value block
Enter display group number XXX
```

- Enter display group number => List of selectable display group numbers, Page 85 .

List of selectable display group numbers

Display group number	Display zone	Designation
001	1	Wheel speed at front left wheel sensor (km/h)
	2	Wheel speed at front right wheel sensor (km/h)
	3	Wheel speed at rear left speed sensor (km/h)
	4	Wheel speed at rear right speed sensor (km/h)
002	1	Wheel speed at front left speed sensor (km/h)
	2	Wheel speed at front right wheel sensor (km/h)
	3	Wheel speed at rear left speed sensor (km/h)
	4	Wheel speed at rear right speed sensor (km/h)

Display group number	Display zone	Designation
003	1	Brake light switch
	2	Vacant
	3	Vacant
	4	Vacant
125	1	Data bus for engine1)
	2	Data bus for gearbox2)
	3	Vacant

Protected by copyright. Copying for private or commercial purposes, in part or in whole, is not permitted unless authorised by Volkswagen AG. Volkswagen AG does not guarantee or accept any liability with respect to the correctness of information in this copy.
satelettronica

Display group number	Display zone	Designation
	4	Vacant

1) Only Polo Classic, Polo Estate

2) Only vehicles with automatic gearbox.

Test sequence and test tables with measured values

Checking speed sensor allocation

Display group number 001

- Press keys 0, 0 and 1.
- Confirm entry with key Q.

```
Read measured value block          1
□ 1    □     2     3     □ 4
```

-> There are always 4 display zones -arrows- in the measured value block. Decoding the individual values in display zones 1 to 4 can be read-off from the following tables.

-> Indicated on display: (vehicle stationary)

```
Read measured value block     1     "
0 km/h     0 km/h     0 km/h     0 km/h
```

Press C key for the next display group number entry.

If the ⇒key is pressed, keys 0 and 8 for work sequence "Read measured value block" must be pressed again afterwards to regain entry.

For display group number 001 remember:

The actual wheel speeds are displayed. They serve to check the speed sensor allocation to the wheel. (The vehicle must be raised and the wheel must be rotated by hand by a 2nd mechanic).

Read measured value block			1 ⇒	Display group number: 001
0 km/h	4 km/h	0 km/h	0 km/h	[Itrif] Indicated on display: (Example)
				Wheel speed at rear right speed sensor - (0...255 km/h)
			Wheel speed at rear left speed sensor - (0...255 km/h)	
		Wheel speed at front right speed sensor - (0...255 km/h)		
	Wheel speed at front left speed sensor - (0...255 km/h)			

Checking speed sensor

Display group number 002

- Press keys 0, 0 and 2.
- Confirm entry with key Q.

```
Read measured value block          2
□ 1    □     2     3     □ 4
```

-> There are always 4 display zones -arrows- in the measured value block. Decoding the individual values in display zones 1 to 4 can be read-off from the following tables.

-> Indicated on display: (vehicle stationary)

```
Read measured value block     2
255 km/h     255 km/h     255 km/h     255
km/h
```

Protected by copyright. Copying for private or commercial purposes, in part or in whole, is not permitted unless authorised by Volkswagen AG. Volkswagen AG does not guarantee or accept any liability with respect to the correctness of information in this document. Copyright by Volkswagen AG.
satelettronica

Press C key for the next display group number entry.

If the ⇒key is pressed, keys 0 and 8 for work sequence "Read measured value block" must be pressed again afterwards to regain entry.

For display group number 002 remember:

The reading of measured value blocks in display group number 002 must be undertaken when driving off slowly. Then the control unit -J104- will store the first usable voltage signals provided by the speed sensors and display these as a fixed value in the measured value block.

Read measured value block 2 ⇒	Display group number: 002
3 km/h1) 6 km/h1) 2 km/h2) 1 km/h2)	[Itrif] Indicated on display: (when driving off slowly)
	Wheel speed at rear right speed sensor - (0...255 km/h)
	Wheel speed at rear left speed sensor - (0...255 km/h)
	Wheel speed at front right speed sensor - (0...255 km/h)
	Wheel speed at front left speed sensor - (0...255 km/h)

1) If the deviations in display zones 1 and 2 are greater than 6 km/h (approx. 3.75 mph), the following faults may be present:

2) If the deviations in display zones 3 and 4 are greater than 2 km/h (approx. 1.25 mph), the following faults may be present:

- Air gap between speed sensor and rotor may be too big.

- Check that speed sensor is screwed correctly to wheel bearing housing.

- Speed sensor or rotor exterior damaged.

- Change damaged component.

Checking brake light switch

Display group number 003

- Press keys 0, 0 and 3
- Confirm entry with key Q.

```
Read measured value block          3
 1      2      3      4
```

-> There are always 4 display zones -arrows- in the measured value block. Decoding the individual values in display zones 1 to 4 can be read-off from the following tables.

-> Indicated on display: (vehicle stationary)

```
Read measured value block     3
not oper.
```

Press C key for the next display group number entry.

If the ⇒key is pressed, keys 0 and 8 for work sequence "Read measured value block" must be pressed again afterwards to regain entry.

Read measured value block 3 ⇒	Display group number: 003
not oper.	[Itrif] Indicated on display
	Vacant
Vacant	

Protected by copyright. Copying for private or commercial purposes, in part or in whole, is not permitted unless authorised by Volkswagen AG. Volkswagen AG does not guarantee or accept any liability with respect to the correctness of information in this document. Copyright by Volkswagen AG.

satelettronica

Vacant
Brake light switch: - not operated ⇒Brake pedal not depressed - operated ⇒Brake pedal depressed If despite depressed foot brake -not oper.- or despite not depressed foot brake -oper.- is displayed on the V.A.G 1551 display, perform test step No. 4 of Electrical check, Page 100 .

Checking data bus wiring

Display group number 125

- Press keys 1, 2 and 5
- Confirm entry with key Q.

```
Read measured value block          125
□ 1    □      2      3      □ 4
```

-> There are always 4 display zones -arrows- in the measured value block. Decoding the individual values in display zones 1 to 4 can be read-off from the following tables.

-> Indicated on display: (vehicle stationary)

```
Read measured value block    125
Engine 1      Gear. 1
```

Press C key for the next display group number entry.

If the ⇒key is pressed, keys 0 and 8 for work sequence "Read measured value block" must be pressed again afterwards to regain entry.

Read measured value block 125 ⇒ Engine 1 Gear. 1 1	Display group number: 125 [ltrif] Indicated on display (example)
Vacant Vacant Data bus for gearbox1) - 1 ⇒Data bus connected. - 0 ⇒Data bus not connected.2) Data bus for engine3) - 1 ⇒Data bus connected - 0 ⇒Data bus not connected.2)	

1) Vehicles with automatic gearbox only.

2) Data bus connection cut-off or data bus wiring interchanged. (not fitted in Caddy)

=> Current flow diagrams, Electrical fault finding and Fitting locations binder.

3) Only Polo Classic, Polo Estate

9.12 - Final control diagnosis

=> Page 29

9.13 - Initiating basic setting

=> Page 36

Protected by copyright. Copying for private or commercial purposes, in part or in whole, is not permitted unless authorised by Volkswagen AG. Volkswagen AG does not guarantee or accept any liability with respect to the correctness of information in this document. Copyright by Volkswagen AG.

sateletronica

10 - Electrical check of ABS Mark 30 IE

10.1 - Electrical check of ABS Mark 30 IE

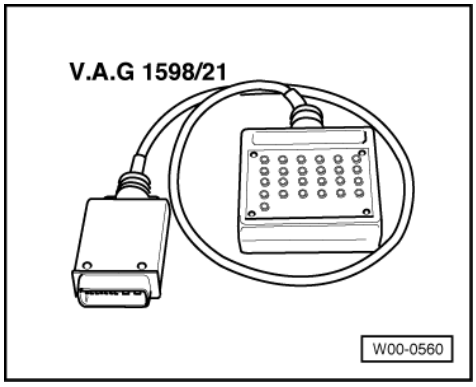

Special tools and workshop equipment required

- V.A.G 1598/21 Adapter

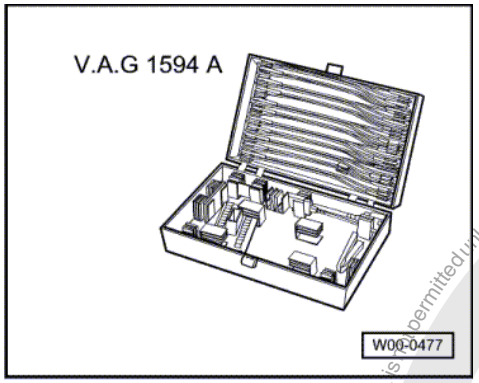

- V.A.G 1594 A Auxiliary test set

Protected by copyright. Copying for private or commercial purposes, in part or in whole, is not permitted unless authorised by Volkswagen AG. Volkswagen AG does not guarantee or accept any liability with respect to the correctness of information in this document. Copyright by Volkswagen AG.
satelettronica

- V.A.G 1526 A Hand multimeter

The test steps from Page 93 are valid for:

- For vehicles on which the self diagnosis does not give any indication of the source of the fault. Work through the complete electrical check.
- For vehicles on which the self diagnosis provides a direct indication of the source of the fault. Only carry out the test steps recommended in the fault table (directed entry).

An overview of all the test steps in the electrical check can be found on Page 92 .

10.2 - Test prerequisites

- Switch ignition and electrical consumers off before commencing the check (headlights, lighting, fan ...).

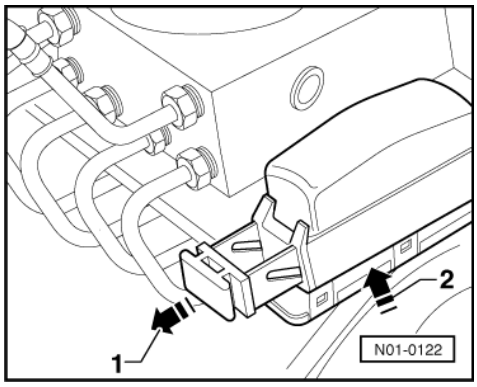

- Fuses SB8, SB15, SA7 and SA8 must be OK (remove fuses from fuse holder to check).

- -> Release control unit -J104- connector -arrow 1- and pull off -arrow 2-.

Protected by copyright. Copyright by Volkswagen AG. Volkswagen AG does not guarantee or accept any liability with respect to the correctness of information in this document. Copyright by Volkswagen AG. Copying for private or commercial purposes, in part or in whole, is not permitted unless authorised by Volkswagen AG.
satelettronica

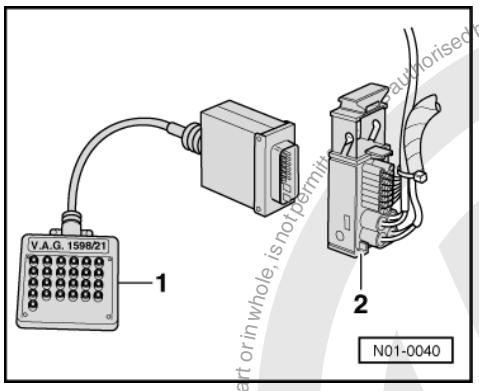

- -> Connect test box V.A.G 1598/21 -1- to multi-pin connector of control unit -J104- -2-.

The specified values are matched to the V.A.G 1526 and are not necessarily applicable for other test units.

10.3 - Multi-pin connector with contact assignment

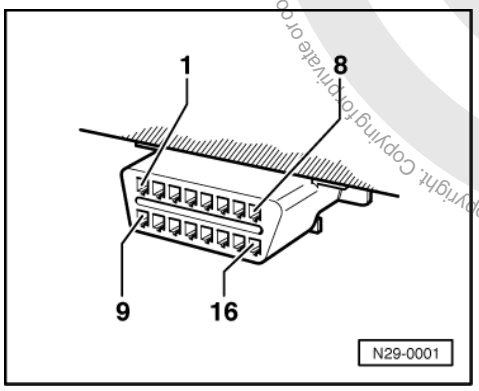

All contacts not listed are currently not assigned and must never be connected to other components!

-> Contact assignment of connectors for voltage supply and self-diagnosis with the fault reader V.A.G 1551

Contact 4	= Earth (terminal 31)
Contact 16	= Positive (terminal 30)
Contact 7	= K wire to contact 7 of multi-pin connector T25 of control unit -J104

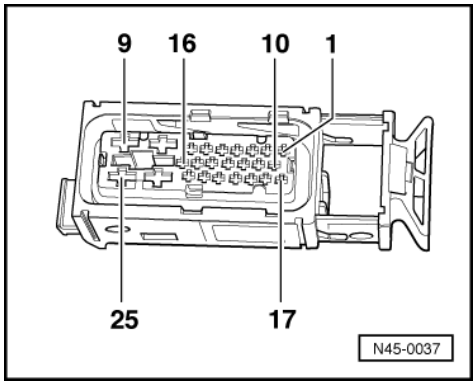

Protected by copyright. Copyright by Volkswagen AG.
Copying for private or commercial purposes, in part or in whole, is not permitted unless authorised by Volkswagen AG. Volkswagen AG does not guarantee or accept any liability with respect to the correctness of information in this document.
satelettronica

-> Contact assignment of connector T25 wiring loom/control unit - J104

Contact	Wiring connection to component ...
1	=> Front left speed sensor -G47
2	=> Front left speed sensor -G47
3	=> Vacant
4	=> Voltage supply to ignition switch
5	=> Rear left speed sensor -G46
6	=> Rear left speed sensor -G46
7	=> Connector T16/7, K wire
8	=> Earth point left in engine compartment and earth connection in engine compartment wiring harness
9	=> Voltage supply from battery +
10	=> Data bus wire => Current flow diagrams (Polo Classic, Polo Estate) => Vacant (Caddy)
11	=> Data bus wire => Current flow diagrams (Polo Classic, Polo Estate) => Vacant (Caddy)
12	=> Vacant

Contact	Wiring connection to component ...
13	=> Coding bridge to contact 17
14	=> Vacant
15	=> Vacant
16	=> Vacant (Polo Classic, Polo Estate) => ABS warning lamp activation (Caddy)
17	=> Coding bridge to contact 13
18	=> Brake light switch -F
19	=> Front right speed sensor -G45
20	=> Front right speed sensor -G45
21	=> Vacant
22	=> Rear right speed sensor -G44
23	=> Rear right speed sensor -G44
24	=> Earth point left in engine compartment and earth connection in engine compartment wiring harness
25	=> Voltage supply from battery +

Test step overview

To test component	
Voltage supply for hydraulic pump -V64- to control unit -J104	- Perform test step 1
Voltage supply for valves in hydraulic unit -N55- to control unit -J104	- Perform test step 2
Voltage supply (terminal X) to control unit -J104	- Perform test step 3
Function of brake light switch -F	- Perform test step 4
Resistance of front right speed sensor -G45	- Perform test step 5
Resistance of front left speed sensor -G47	- Perform test step 6
Resistance of rear right speed sensor -G44	- Perform test step 7
Resistance of rear left speed sensor -G46	- Perform test step 8
Voltage signal of front right speed sensor -G45	- Perform test step 9
Voltage signal of front left speed sensor -G47	- Perform test step 10

To test component	
Voltage signal of rear right speed sensor -G44	- Perform test step 11
Voltage signal of rear left speed sensor -G46	- Perform test step 12

satelettronica

To test component	
Coding bridge	- Perform test step 13
Voltage supply for V.A.G 1551, connector T16	- Perform test step 14
Resistance of K wire for self-diagnosis, connector T16	- Perform test step 15
Function of ABS warning lamp -K47	- Perform test step 16
Function of brake system warning lamp -K118	- Perform test step 17
Function of hydraulic pump -V64	- Perform test step 18
Checking data bus wire	- Perform test step 19

10.4 - Test table

Notes on test table

- The socket designations of adapter V.A.G 1598/21 are identical to the control unit -J104- contact designations in current flow diagram.

=> Current flow diagrams, Electrical fault finding and Fitting locations binder

- If the readings obtained deviate from the specifications, carry out fault rectification measure in the right-hand part of the table.

=> Current flow diagrams, Electrical fault finding and Fitting locations binder

- Continuity checks with adapter set V.A.G 1594 A (bridging).
- If the measured figures only deviate slightly from the specifications, clean sockets and plugs of the testers and adapter cables (with contact spray G 000 700 04) and repeat check. Before replacing components, check wiring and connections and also, particularly for specifications of less than 10 ω, repeat resistance check on the component.

Switch to measuring range:
Voltage measurement (20 V =)

Test step	V.A.G 1598 sockets	Item tested	▪ Test conditions - Additional operations	Specification	Measures for deviations from specification
1	8 + 25	Voltage supply for hydraulic pump -V64- to control unit -J104	▪ Ignition switched off	10.0 - 14.5 V	- Check wire using current flow diagram => Current flow diagrams, Electrical fault finding and Fitting locations binder
2	9 + 24	Voltage supply for the valves in hydraulic unit -N55- to control unit -J104	▪ Ignition switched off	10.0 - 14.5 V	- Check wire using current flow diagram => Current flow diagrams, Electrical fault finding and Fitting locations binder

Switch to measuring range:
Voltage measurement (20 V =)

Test step	V.A.G 1598 sockets	Item tested	▪ Test conditions - Additional operations	Specification	Measures for deviations from specification

satelettronica

Switch to measuring range: Voltage measurement (20 V =)					
3	8 + 4	Voltage supply (terminal X) to control unit -J104	▪ Ignition switched on	10.0 - 14.5 V	- Check wire using current flow diagram => Current flow diagrams, Electrical fault finding and Fitting locations binder
4	8 + 18	Function of brake light switch -F	▪ Ignition switched off ▪ Brake pedal not depressed	0.0 - 0.5 V	- Check brake light switch -F- and Read measured value block, display group 003 =>Page 84 - Check wiring using current flow diagram => Current flow diagrams, Electrical fault finding and Fitting locations binder
			- Depress brake pedal	approx. battery voltage	- Checking brake light switch -F- =>Page 100

Switch to measuring range: Resistance measurement (2 kω)					
Test step	V.A.G 1598 sockets	Item tested	▪ Test conditions - Additional operations	Specification	Measures for deviations from specification
5	19 + 20	Resistance of front right speed sensor - G45	▪ Ignition switched off	1.0...1.3 kω	- Check wiring using current flow diagram => Current flow diagrams, Electrical fault finding and Fitting locations binder - Wiggle wiring during test If no fault can be located in the wiring: - Renew speed sensor -G45 => Brake systems; Repair group 45; Removing and installing parts of ABS system on front and rear axles Removing and installing parts of ABS system on front and rear axles

Switch to measuring range: Resistance measurement (2 kω)					
Test step	V.A.G 1598 sockets	Item tested	▪ Test conditions - Additional operations	Specification	Measures for deviations from specification
6	1 + 2	Resistance of front left speed sensor - G47	▪ Ignition switched off	1.0...1.3 kω	

Protected by copyright. Copying for private or commercial purposes, in part or in whole, is not permitted unless authorised by Volkswagen AG. Volkswagen AG does not guarantee or accept any liability with respect to the correctness of information in this document. Copyright by Volkswagen AG.

satelettronica

Protected by copyright. Copying for private or commercial purposes, in part or in whole, is not permitted unless authorised by Volkswagen AG. Volkswagen AG does not guarantee or accept any liability with respect to the correctness of information in this document. Copyright by Volkswagen AG.

Switch to measuring range: Resistance measurement (2 kω)					
					- Check wiring using current flow diagram => Current flow diagrams, Electrical fault finding and Fitting locations binder - Wiggle wiring during test If no fault can be located in the wiring: - Renew speed sensor -G47 => Brake systems; Repair group 45; Removing and installing parts of ABS system on front and rear axles Removing and installing parts of ABS system on front and rear axles

Switch to measuring range: Resistance measurement (2 kω)					
Test step	V.A.G 1598 sockets	Item tested	▪ Test conditions - Additional operations	Specification	Measures for deviations from specification
7	22 + 23	Resistance of rear right speed sensor - G44	▪ Ignition switched off	1.0...1.3 kω	- Check wiring using current flow diagram => Current flow diagrams, Electrical fault finding and Fitting locations binder - Wiggle wiring during test If no fault can be located in the wiring: - Renew speed sensor -G44 => Brake systems; Repair group 45; Removing and installing parts of ABS system on front and rear axles Removing and installing parts of ABS system on front and rear axles

Switch to measuring range: Resistance measurement (2 kω)					
Test step	V.A.G 1598 sockets	Item tested	▪ Test conditions - Additional operations	Specification	Measures for deviations from specification
8	5 + 6	Resistance of rear left speed sensor - G46	▪ Ignition switched off	1.0...1.3 kω	- Separate connector on speed sensor - G46

satelettronica

Switch to measuring range: Resistance measurement (2 kω)					
					- Check wiring using current flow diagram => Current flow diagrams, Electrical fault finding and Fitting locations binder - Wiggle wiring during test If no fault can be located in the wiring: - Renew speed sensor -G46 => Brake systems; Repair group 45; Removing and installing parts of ABS system on front and rear axles Removing and installing parts of ABS system on front and rear axles

Switch to measuring range: Voltage measurement (2 V font=symbol charset=fontspecific code=64 descr='[ap]')					
Test step	V.A.G 1598 sockets	Item tested	▪ Test conditions - Additional operations	Specification	Measures for deviations from specification
9	19 + 20	Front right speed sensor -G45- voltage signal	▪ Vehicle raised ▪ Ignition switched off - Rotate front right wheel at approx. 1 rev./sec.	min. 65 mV alternating voltage	- Check installation of speed sensor -G45- and rotor. - Check whether speed sensor -G45- has been interchanged andRead measured value block =>Page 84 , display group number 001
10	1 + 12	Front left speed sensor -G47- voltage signal	▪ Vehicle raised ▪ Ignition switched off - Rotate front left wheel at approx. 1 rev./sec.	min. 65 mV alternating voltage	- Check installation of speed sensor -G47- and rotor. - Check whether speed sensor -G47- has been interchanged andRead measured value block =>Page 84 , display group number 001

Switch to measuring range: Voltage measurement (2 V font=symbol charset=fontspecific code=64 descr='[ap]')					
Test step	V.A.G 1598 sockets	Item tested	▪ Test conditions - Additional operations	Specification	Measures for deviations from specification

Copyright by Volkswagen AG. Volkswagen AG does not guarantee or accept any liability with respect to the correctness of information in this document. Copying for private or commercial purposes, in part or in whole, is not permitted unless authorised by Volkswagen AG.

satelettronica

Protected by copyright. Copying for private or commercial purposes, in part or in whole, is not permitted unless authorised by Volkswagen AG. Volkswagen AG does not guarantee or accept any liability with respect to the correctness of information in this document. Copyright by Volkswagen AG.

Switch to measuring range: Voltage measurement (2 V font=symbol charset=fontspecific code=64 descr='[ap]')					
11	22 + 23	Rear right speed sensor -G44- voltage signal	▪ Vehicle raised ▪ Ignition switched off - Rotate rear right wheel at approx. 1 rev./sec.	min. 190 mV alternating voltage	- Check installation of speed sensor -G44- and rotor. - Check whether speed sensor -G44- has been interchanged andRead measured value block =>Page 84 , display group number 001
12	6 + 5	Rear left speed sensor -G46- voltage signal	▪ Vehicle raised ▪ Ignition switched off - Rotate rear left wheel at approx. 1 rev./sec.	min. 190 mV alternating voltage	- Check installation of speed sensor -G46- and rotor. - Check whether speed sensor -G46- has been interchanged andRead measured value block =>Page 84 , display group number 001

Switch to measuring range: Resistance measurement (200 ω)					
Test step	V.A.G 1598 sockets	Item tested	▪ Test conditions - Additional operations	Specification	Measures for deviations from specification
13	13 + 17	Coding bridge	▪ Ignition switched off	0.0 -1.0 ω	- Check wiring using current flow diagram => Current flow diagrams, Electrical fault finding and Fitting locations binder

Switch to measuring range: Voltage measurement (20 V =)					
Test step	V.A.G 1598 sockets	Item tested	▪ Test conditions - Additional operations	Specification	Measures for deviations from specification
14	-	Supply voltage for V.A.G 1551, connector T161)	▪ Ignition switched off Connect hand multimeter V.A.G 1526 using adapter set V.A.G 1594 to connector T161)	10.0 -14.5 V	- Check wiring using current flow diagram => Current flow diagrams, Electrical fault finding and Fitting locations binder

1) Diagnosis connection contact assignment =>page 91 .

satelettronica

Switch to measuring range: Resistance measurement 200 ω					
Test step	V.A.G 1598 sockets	Item tested	▪ Test conditions - Additional operations	Specification	Measures for deviations from specification
15	-	Resistance of K wire for V.A.G 1551 connector T161)	▪ Ignition switched off Disconnect multi-pin connector from control unit -J104 - Connect test box V.A.G 1598/21 - Connect multimeter V.A.G 1526 to contacts T16/71) and T25/7 of multi-pin connectors from control unit -J104- using adapter set V.A.G 1594	max. 1.5 ω	- Check wiring using current flow diagram => Current flow diagrams, Electrical fault finding and Fitting locations binder

1) Diagnosis connection contact assignment =>page 91 .

Functional check: ABS warning lamp -K47					
Test step	V.A.G 1598 sockets	Item tested	▪ Test conditions - Additional operations	Specification	Measures for deviations from specification
16	-	Function of ABS warning lamp -K47	▪ Switch ignition on	Warning lamp -K47- lights up for approx. 2 seconds and goes out again	- Check wiring using current flow diagram => Current flow diagrams, Electrical fault finding and Fitting locations binder - Fault in dash panel insert => General body repairs, interior; Repair group 70; Dash panel

Functional check: Brake system warning lamp -K118					
Test step	V.A.G 1598 sockets	Item tested	▪ Test conditions - Additional operations	Specification	Measures for deviations from specification
17	-	Function of brake system warning lamp -K118	▪ Handbrake not applied ▪ Brake fluid level is OK. ▪ Switch ignition on - Apply handbrake	Warning lamp -K118- does not light up Warning lamp -K118- lights up	- Check wiring using current flow diagram

Copyright. Copying for private or commercial purposes, in part or in whole, is not permitted unless authorised by Volkswagen AG. Volkswagen AG does not guarantee the accuracy and availability with respect to this document's contents.

satelettronica

Functional check: Brake system warning lamp -K118					
					=> Current flow diagrams, Electrical fault finding and Fitting locations binder - Fault in dash panel insert => General body repairs, interior; Repair group 70; Dash panel

Functional check: Hydraulic pump -V64					
Test step	V.A.G 1598 sockets	Item tested	▪ Test conditions - Additional operations	Specification	Measures for deviations from specification
18	-	Function of ABS hydraulic pump -V64-	▪ Ignition switched off Pull connector T2f off ABS hydraulic pump -V64- at control unit -J104- - Connect earth and T2f/2 battery voltage to ABS hydraulic pump connector -V64- T2f/1	Hydraulic pump -V64- runs fault free (max. 10 secs.) Hydraulic pump -V64- does not run	- Perform final control diagnosis => Page 29 . Renew control unit -J104-. - Renew hydraulic unit. => Brake system; Repair group 45

Switch to measuring range: Resistance measurement (200 ω/20 M ω)					
Test step	V.A.G 1598 sockets	Item tested	▪ Test conditions - Additional operations	Specification	Measures for deviations from specification
19		Data bus wiring	▪ Ignition switched off ▪ Set to measuring range 200 ω - Disconnect multi-pin connection from a control unit which is connected via data bus wiring: - Connect test box V.A.G 1598/21 - Check data bus wiring for open circuit	max. 1.5 ω	- Check wiring using current flow diagram => Current flow diagrams, Electrical fault finding and Fitting locations binder
				Test step 19: Continued on next page.	

Continuation of test step 19					
Test step	V.A.G 1598 sockets	Item tested	▪ Test conditions - Additional operations	Specification	Measures for deviations from specification
			▪ Set to measuring range 20 M ω - Remove fuse SB 8		

Protected by copyright. Copying for private or commercial purposes, in part or in whole, is not permitted unless authorised by Volkswagen AG. Volkswagen AG does not guarantee or accept any liability with respect to the correctness of information in this copy.
satelettronica

			- Check wiring for short circuit to positive or earth	∞ ω	- Check wiring using current flow diagram => Current flow diagrams, Electrical fault finding and Fitting locations binder

10.5 - Adjusting brake light switch

Remove brake light switch to adjust.

- Remove driver's side stowage compartment.

=> General body repairs, interior; Repair group 68; Shelves, covers and trims Shelves, covers and trims

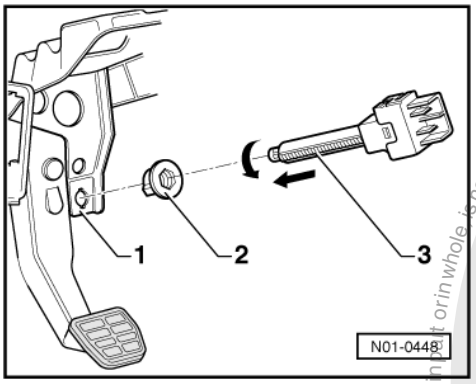

1 - -> Pedal cluster mounting bracket
2 - Clip
3 - Brake light switch -F

- Pull connector off brake light switch.
- Remove brake light switch by turning to left through 90°.

Installing brake light switch

- Clip installed in mounting bracket
- Brake pedal not depressed

- Insert the brake light switch -3- into installed clip -2-.

1 - -> Pedal cluster mounting bracket

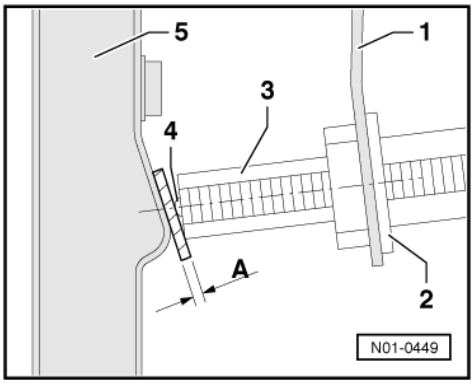

2 - Clip
3 - Brake light switch -F
4 - Actuating rod

Protected by copyright. Copying for private or commercial purposes, in part or in whole, is not permitted unless authorised by Volkswagen AG. Volkswagen AG does not guarantee or accept any liability with respect to the correctness of information in this document. Copyright by Volkswagen AG.
satelettronica

5 - Brake pedal
A - Setting dimension= 2.5 mm

- Hold a gauge (e.g. afeeler gauge) of the correct dimension on the brake pedal.
- -> Then press the brake light switch through the clip. The actuating rod will contact the gauge first. Continue to press on the brake light switch until the brake light switch housing contacts the gauge (the actuating rod of the brake light switch is pushed into the brake light switch housing).
- Lock brake light switch by turning to right through 90°.

After adjusting brake light switch, ensure the brake pedal is in the end stop position (released position).

- Fit brake light switch connector.

Checking brake light switch function

- Operate brake pedal.

=>The brake lights must come on when the brake pedal is depressed 4 to 10 mm, if this is not the case readjust switch.

- Take foot off brake pedal.

=>Brake lights must not light up.

- Refit driver's side stowage tray.

=> General body repairs, interior; Repair group 68; Compartments, covers and trims Compartments, covers and trims

11 - Definitions

11.1 - Definitions

These explanations refer only to this assembly group: Self-diagnosis for ABS. These definitions are not necessarily generally valid.

ABS

Anti-locking brake system. Further information on the ABS can be found in the appropriate Self-study programmes.

Display group number => Read measured value block

Data bus

Transportation of data. To do this the electrical signals are brought into a certain format (BUS). Further information on this can be found in Self-study programme No.180 and186.

Data bus low (high)

The voltage used to transport the data is low (high). Further information on this can be found in Self-study programme No. 186.

Speed sensor

Sends speed signals to control unit.

Protected by copyright. Copying for private or commercial purposes, in part or in whole, is not permitted unless authorised by Volkswagen AG. Volkswagen AG does not guarantee or accept any liability with respect to the correctness of information in this document. Copyright by Volkswagen AG.
satelettronica

EBD

Electronic brake pressure distribution

EDL

Electronic differential lock

Self-diagnosis

The capability of the control unit:

- recognise faults,
- react to faults,
- store faults,

to register faults and make them available in the read measured value block. Further information on this can be found in Self-study programme No.180 and test unit instruction manual.

Performing self-diagnosis

Connecting the fault reader to be able to interrogate the fault memory. Further information on this can be found in Self-study programme No.180 and test unit instruction manual.

Performing electrical check

By performing certain measurements a targeted check of the electronic components.

No communication

There is no connection for exchanging information between the control units. Further information on this can be found in Self-study programme No. 180.

Short to earth

Current flows -incorrectly- to earth without supplying a consumer.

Short to positive

Current flows -incorrectly- to a live component without supplying a consumer.

Read measured value block

The control unit can transfer a considerable amount of test data. This test data delivers information on the operational condition of the system and/or sensors connected to it. In many cases the transferred test data supports fault finding and fault rectification. The test data has been summarized into single display groups because all the information cannot be evaluated at the same time. The information can be selected via display group numbers.

Programme card version

Always use the most up-to-date programme card. Further information can be found in the test unit operating instructions.

Sporadic

Happens occasionally

Infinity ω

The resistance is infinite, open circuit.

Protected by copyright. Copying for private or commercial purposes, in part or in whole, is not permitted unless authorised by Volkswagen AG. Volkswagen AG does not guarantee or accept any liability with respect to the correctness of information in this document. Copyright by Volkswagen AG.

satelettronica

ω = Ohm

Protected by copyright. Copying for private or commercial purposes, in part or in whole, is not permitted unless authorised by Volkswagen AG. Volkswagen AG does not guarantee or accept any liability with respect to the correctness of information in this document. Copyright by Volkswagen AG.

satelettronica